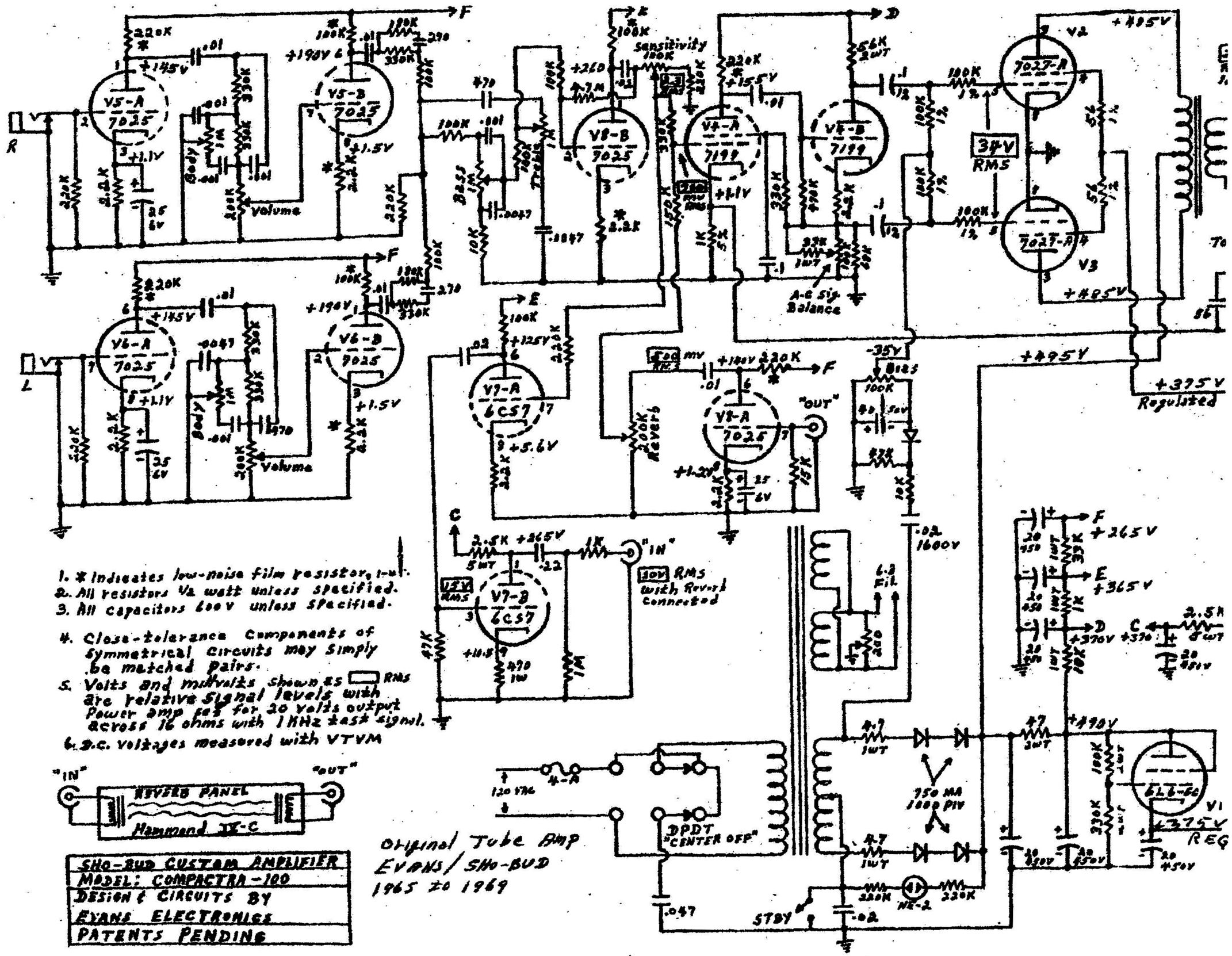
V5-A 7025
V5-B 7025
V6-A 7025
V6-B 7025
V7-A 6C57
V7-B 6C57
V8-A 7025
V8-B 7025
V4-A 7199
V4-B 7199
V2 7027-A
V3 7027-A
V1 EL6-Ec
Volume
Body
Bass
Treble
Sensitivity
A-C Sig. Balance
Reverb
"OUT"
"IN"
30V RMS with Reverb connected
125V RMS
30V RMS
RMS
+495V
+375V Regulated
+265V
+365V
+370V
+490V
+375V REG
-35V
Bias
750 MA 1000 PIV
DPDT "CENTER OFF"
STBY
NE-2
6.3 Fil.
120 VAC
4-A
1. * Indicates low-noise film resistor, 1-watt.
2. All resistors ½ watt unless specified.
3. All capacitors 600V unless specified.
4. Close-tolerance components of symmetrical circuits may simply be matched pairs.
5. Volts and millivolts shown as RMS are relative signal levels with power amp set for 20 volts output across 16 ohms with 1KHz test signal.
6. D.C. voltages measured with VTVM
REVERB PANEL
Hammond IV-C
SHO-BUD CUSTOM AMPLIFIER
MODEL: COMPACTRA-100
DESIGN & CIRCUITS BY
EVANS ELECTRONICS
PATENTS PENDING
Original Tube Amp
EVANS/SHO-BUD
1965 to 1969