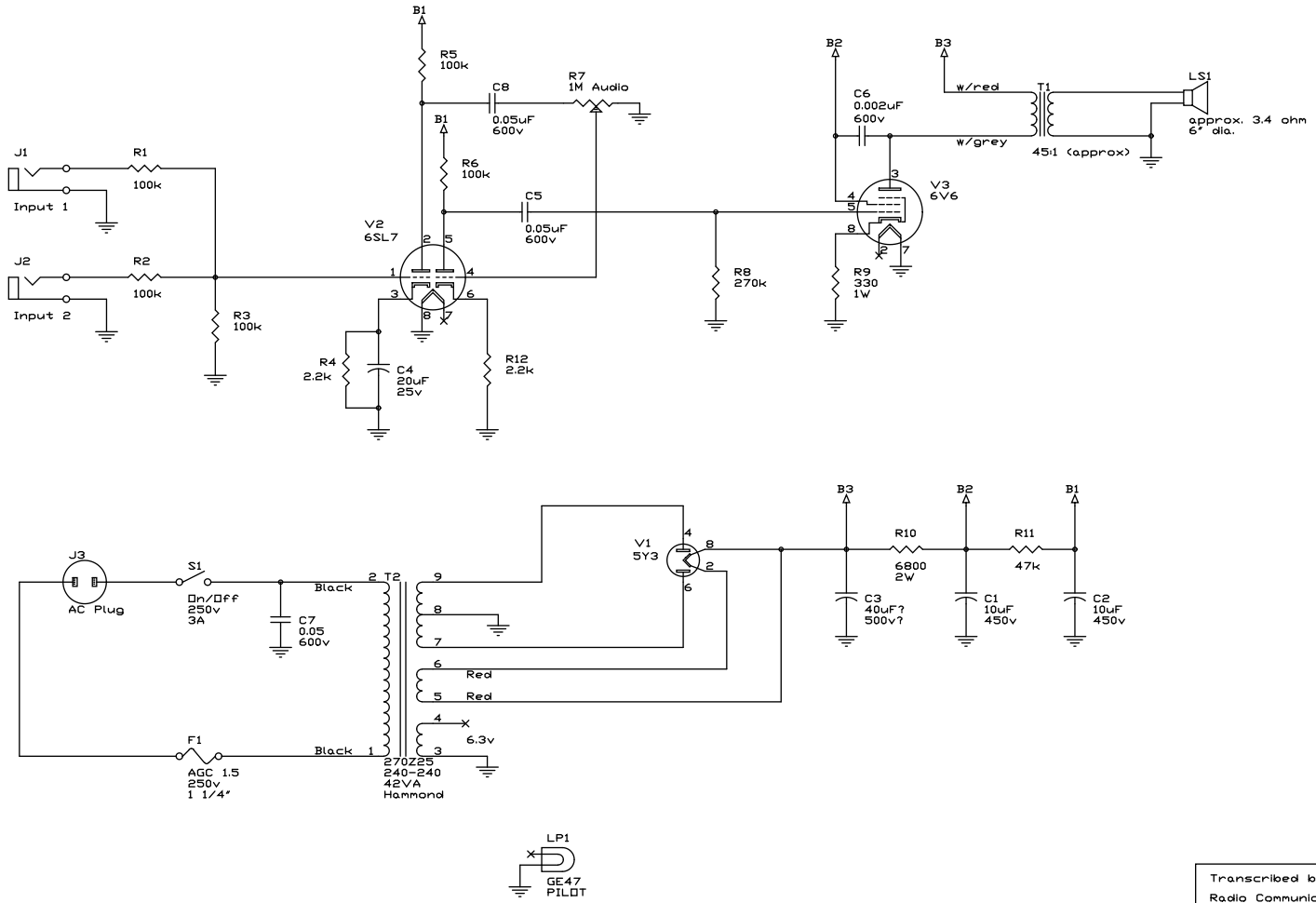

Notes:

Unless otherwise noted all resistors are 10%, 1/2 watt
The value and rating of C3 was not able to be determined on the original amp.
'x' represents the 6.3vac heater connection

Transcribed by ac151@ncf.ca from S/N 3557

Radio Communications Equipment
& Engineering Ltd. Montreal
CSA Approval No. 10108

Title		
RCE Model No. G5 Tube Amp		
Size B	Document Number 1/1	REV -
Date: February 4, 2012	Sheet 1 of 1	