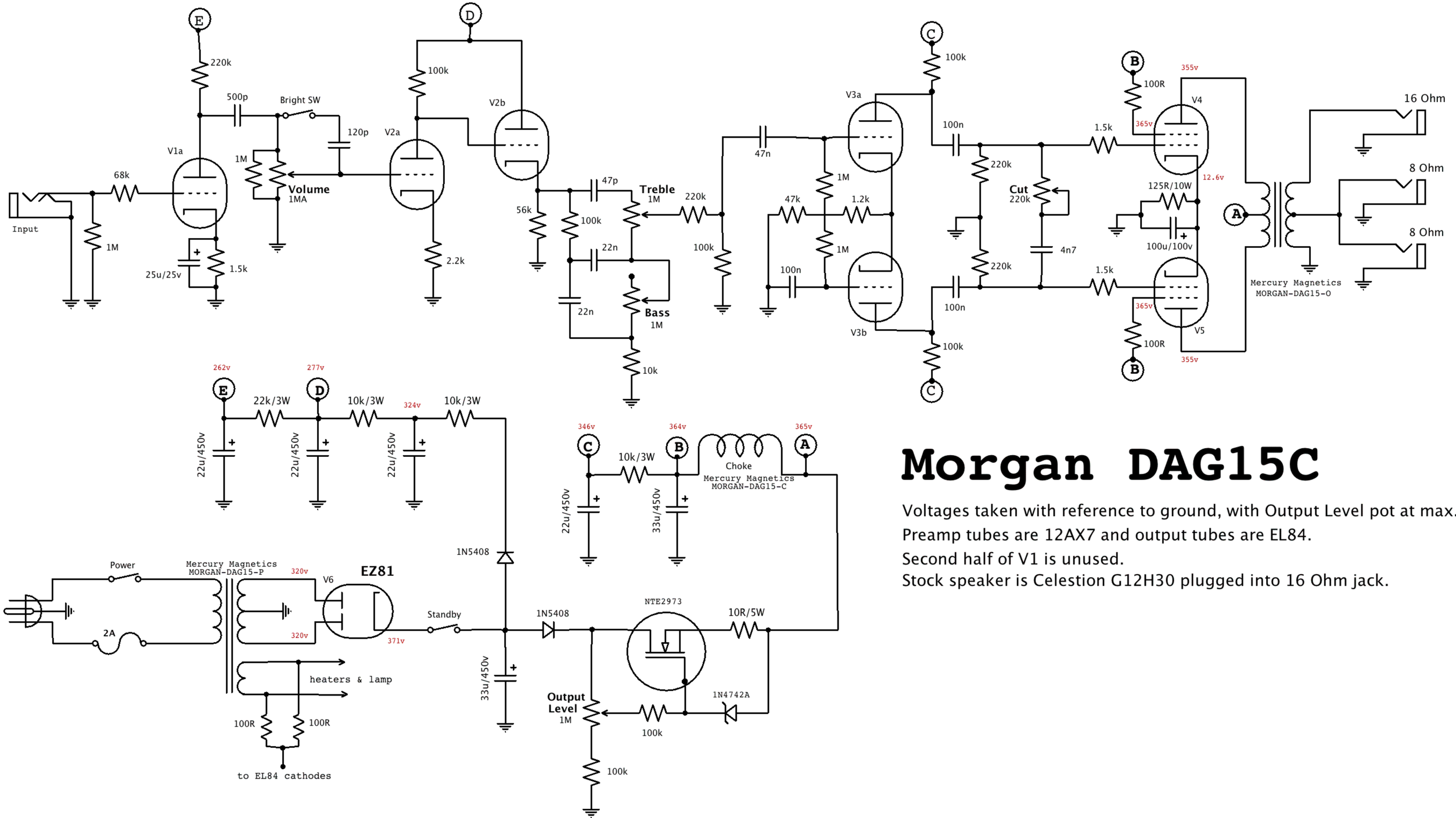

Morgan DAG15C

Voltages taken with reference to ground, with Output Level pot at max.
Preamp tubes are 12AX7 and output tubes are EL84.
Second half of V1 is unused.
Stock speaker is Celestion G12H30 plugged into 16 Ohm jack.