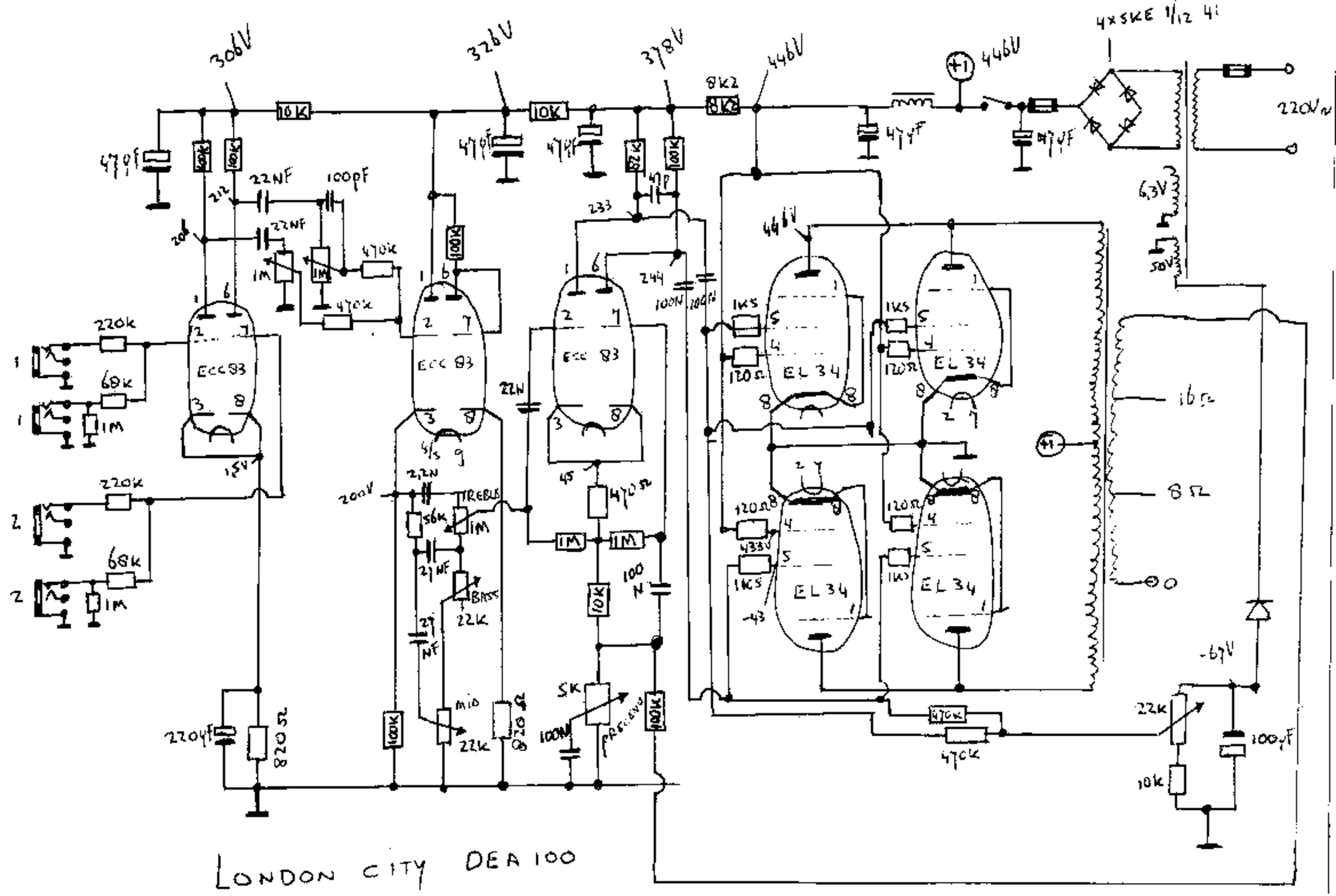
306V
326V
378V
446V
4xSKE 1/12 4i
220V~
6,3V
50V
ECC83
ECC83
ECC83
EL34
EL34
EL34
EL34
16Ω
8Ω
0
-67V
TREBLE
BASS
MID
PRESENCE
LONDON CITY DEA 100