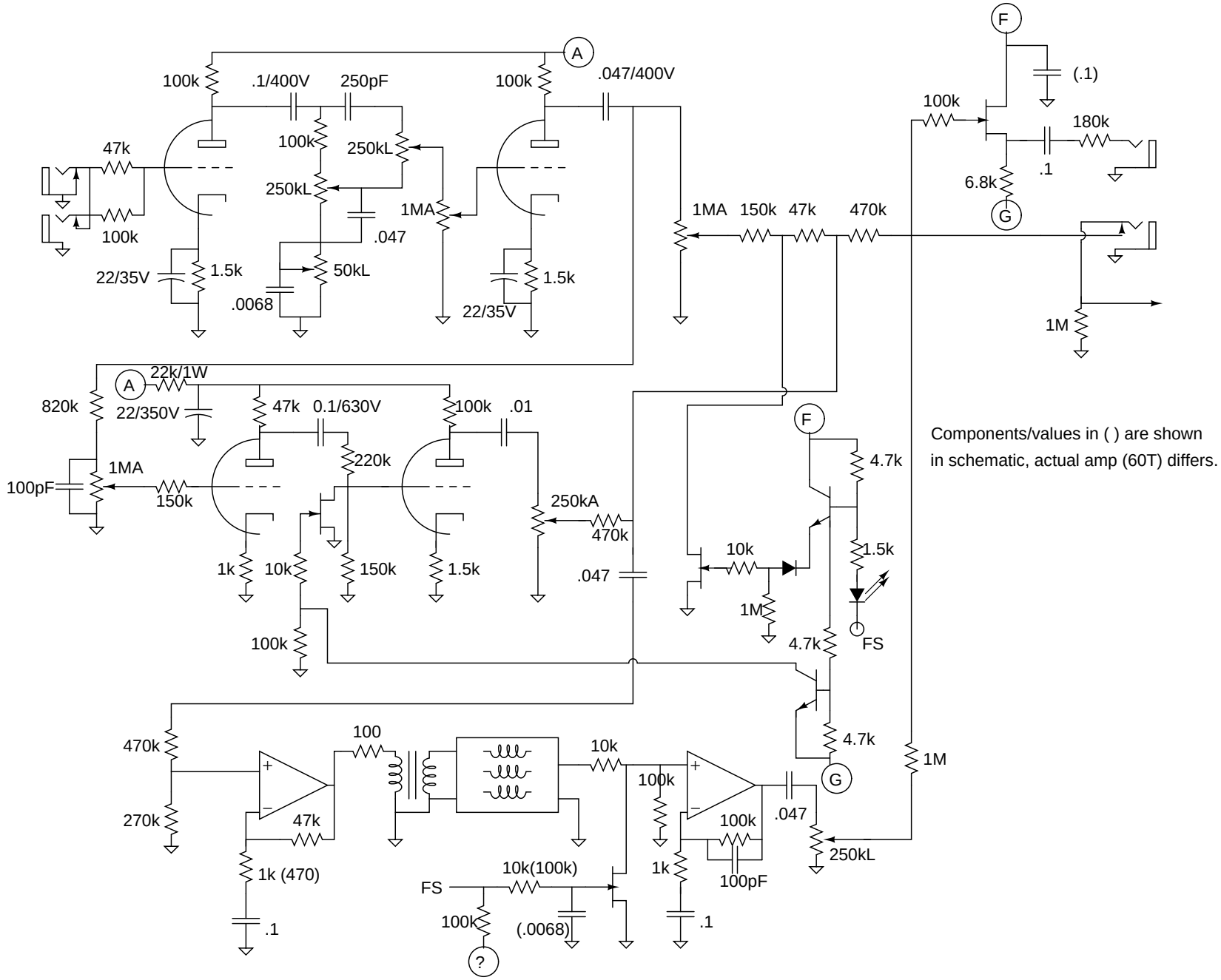JMF Spectra Preamp