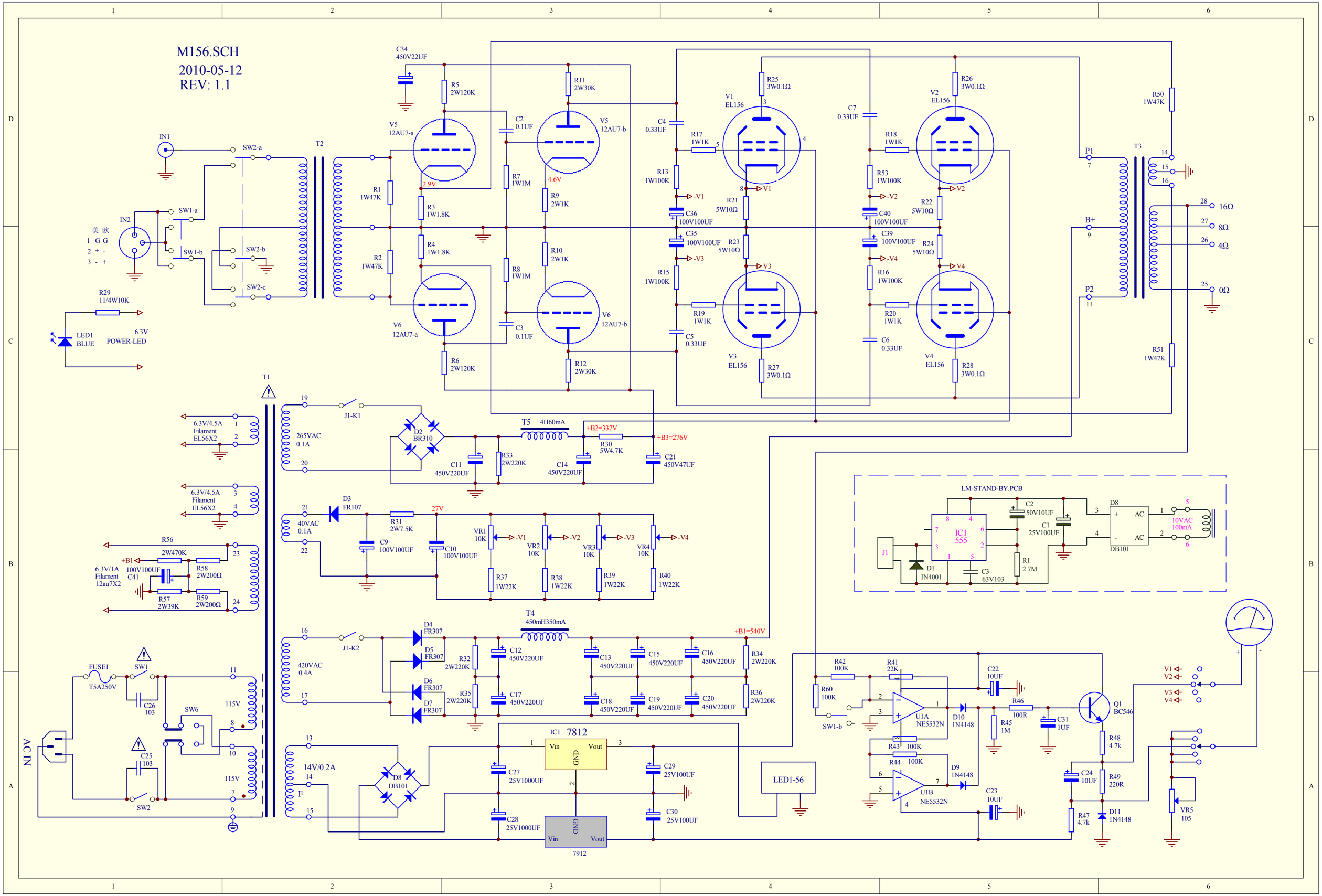
M156.SCH
2010-05-12
REV: 1.1
IN1
IN2
美 欧
1 G G
2 + -
3 - +
SW1-a
SW1-b
SW2-a
SW2-b
SW2-c
T2
R29
11/4W10K
LED1
BLUE
6.3V
POWER-LED
C34
450V22UF
R5
2W120K
R6
2W120K
R1
1W47K
R2
1W47K
R3
1W1.8K
R4
1W1.8K
V5
12AU7-a
V6
12AU7-a
2.9V
C2
0.1UF
C3
0.1UF
R7
1W1M
R8
1W1M
R11
2W30K
R12
2W30K
R9
2W1K
R10
2W1K
V5
12AU7-b
V6
12AU7-b
4.6V
C4
0.33UF
C5
0.33UF
R13
1W100K
R15
1W100K
R17
1W1K
R19
1W1K
C36
100V100UF
C35
100V100UF
-V1
-V3
V1
EL156
V3
EL156
R25
3W0.1Ω
R27
3W0.1Ω
R21
5W10Ω
R23
5W10Ω
V1
V3
C7
0.33UF
C6
0.33UF
R53
1W100K
R16
1W100K
R18
1W1K
R20
1W1K
C40
100V100UF
C39
100V100UF
-V2
-V4
V2
EL156
V4
EL156
R26
3W0.1Ω
R28
3W0.1Ω
R22
5W10Ω
R24
5W10Ω
V2
V4
P1
P2
B+
T3
R50
1W47K
R51
1W47K
16Ω
8Ω
4Ω
0Ω
T1
6.3V/4.5A
Filament
EL56X2
265VAC
0.1A
J1-K1
D2
BR310
T5 4H60mA
+B2=337V
+B3=276V
R30
5W4.7K
C11
450V220UF
R33
2W220K
C14
450V220UF
C21
450V47UF
40VAC
0.1A
D3
FR107
R31
2W7.5K
27V
C9
100V100UF
C10
100V100UF
VR1
10K
VR2
10K
VR3
10K
VR4
10K
R37
1W22K
R38
1W22K
R39
1W22K
R40
1W22K
R56
2W470K
+B1
6.3V/1A
Filament
12au7X2
100V100UF
C41
R58
2W200Ω
R57
2W39K
R59
2W200Ω
T4
450mH350mA
+B1=540V
420VAC
0.4A
J1-K2
D4
FR307
D5
FR307
D6
FR307
D7
FR307
R32
2W220K
R35
2W220K
C12
450V220UF
C17
450V220UF
C13
450V220UF
C18
450V220UF
C15
450V220UF
C19
450V220UF
C16
450V220UF
C20
450V220UF
R34
2W220K
R36
2W220K
FUSE1
T5A250V
SW1
C26
103
SW6
115V
C25
103
SW2
AC IN
14V/0.2A
D8
DB101
IC1 7812
Vin
Vout
GND
C27
25V1000UF
C28
25V1000UF
C29
25V100UF
C30
25V100UF
7912
LED1-56
LM-STAND-BY.PCB
J1
D1
1N4001
IC1
555
C2
50V10UF
C1
25V100UF
C3
63V103
R1
2.7M
D8
DB101
10VAC
100mA
R42
100K
R60
100K
R41
22K
R43
100K
R44
100K
U1A
NE5532N
U1B
NE5532N
D10
1N4148
D9
1N4148
C22
10UF
C23
10UF
R45
1M
R46
100R
C31
1UF
Q1
BC546
R48
4.7k
R49
220R
C24
10UF
R47
4.7k
D11
1N4148
VR5
105
V1
V2
V3
V4