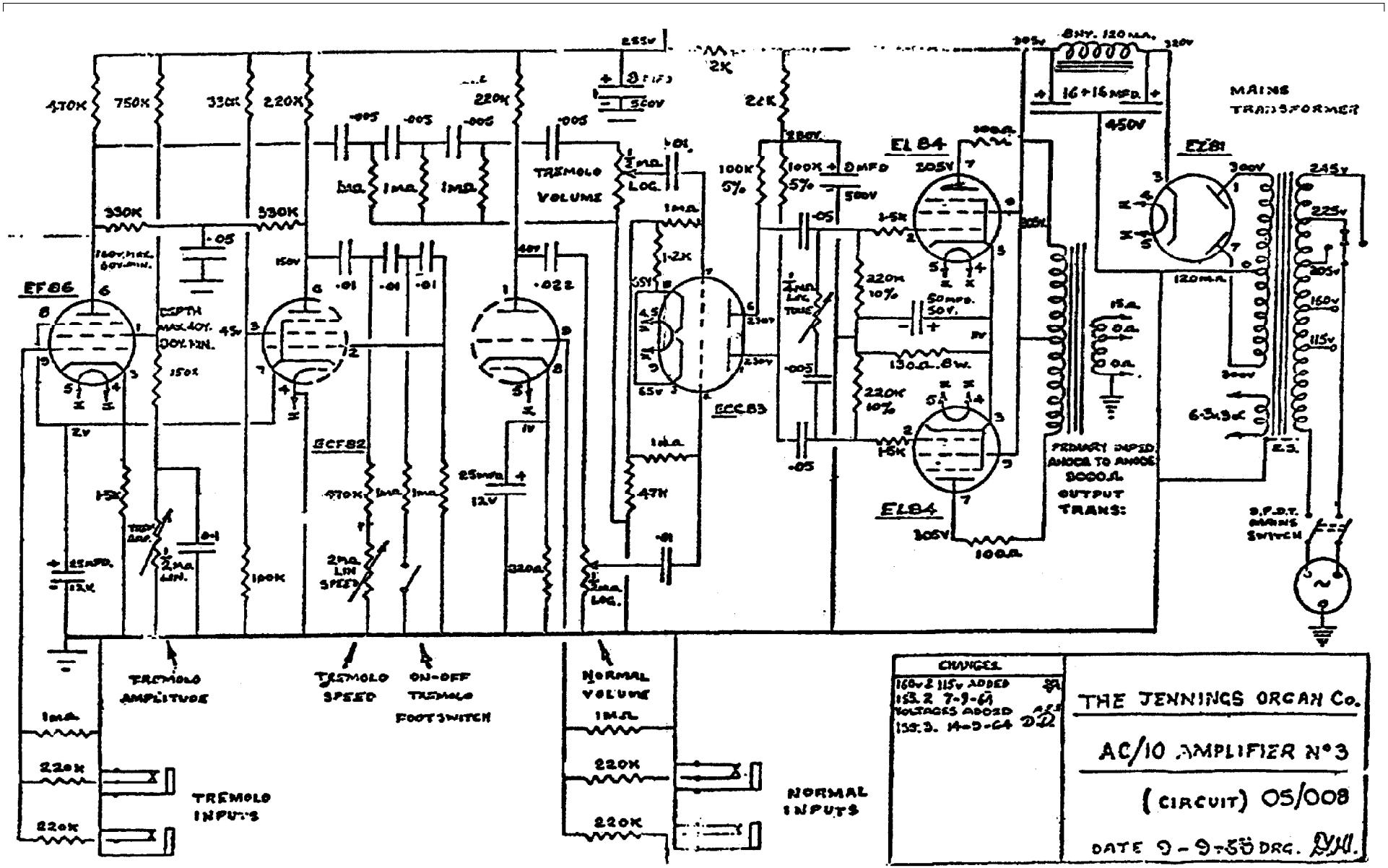
EF86
ECF82
ECC83
EL84
EL84
EZ81
MAINS TRANSFORMER
TREMOLO VOLUME
TREMOLO AMPLITUDE
TREMOLO SPEED
ON-OFF TREMOLO FOOTSWITCH
NORMAL VOLUME
TREMOLO INPUTS
NORMAL INPUTS
PRIMARY IMPED ANODE TO ANODE 5000Ω
OUTPUT TRANS:
S.P.D.T. MAINS SWITCH
CHANGES
THE JENNINGS ORGAN Co.
AC/10 AMPLIFIER N°3
(CIRCUIT) 05/008
DATE 9-9-58 DRG.