U - 102

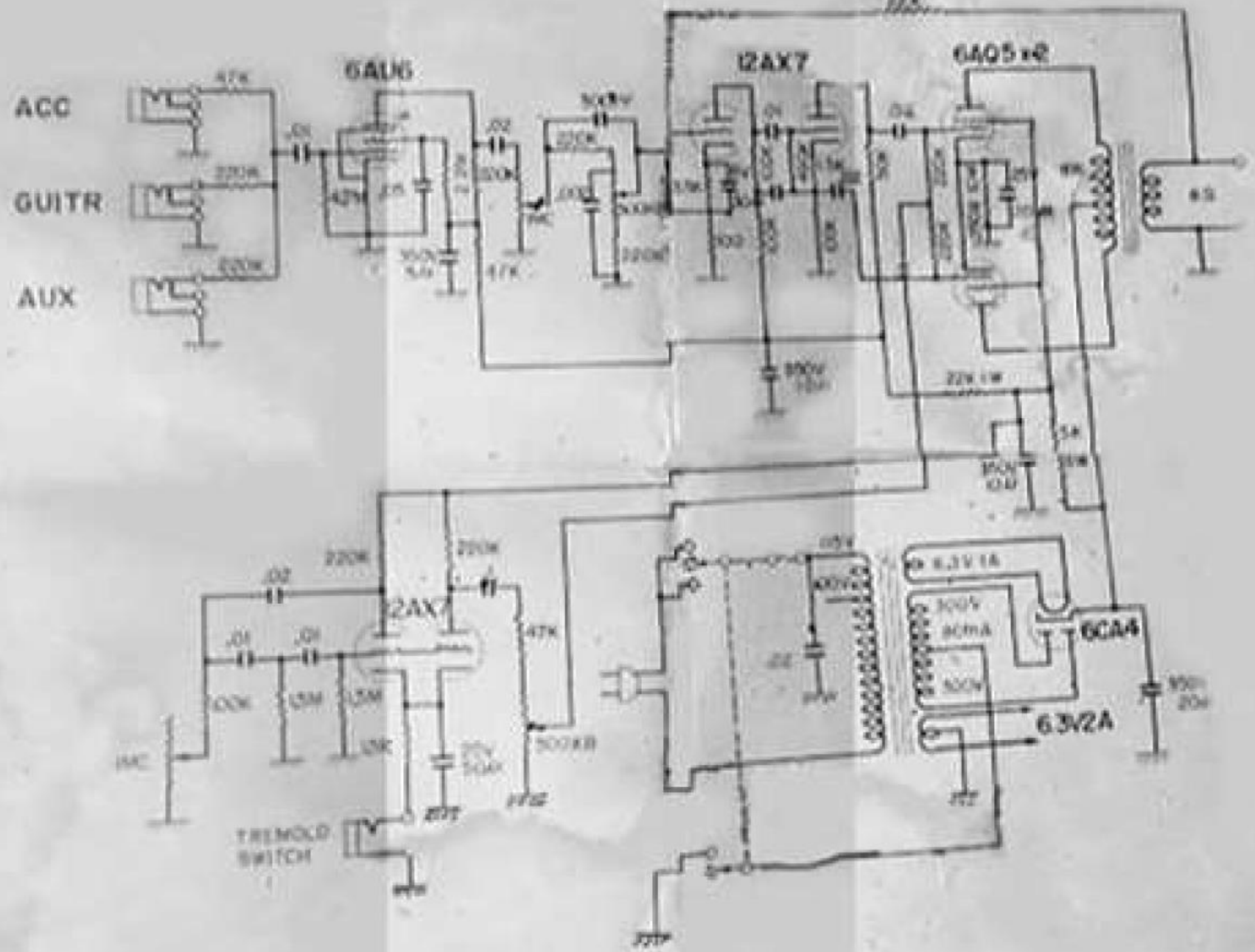
ACC
GUITR
AUX
6AU6
12AX7
6AQ5 x2
6CA4
6.3V 1A
6.3V2A
TREMOLO SWITCH

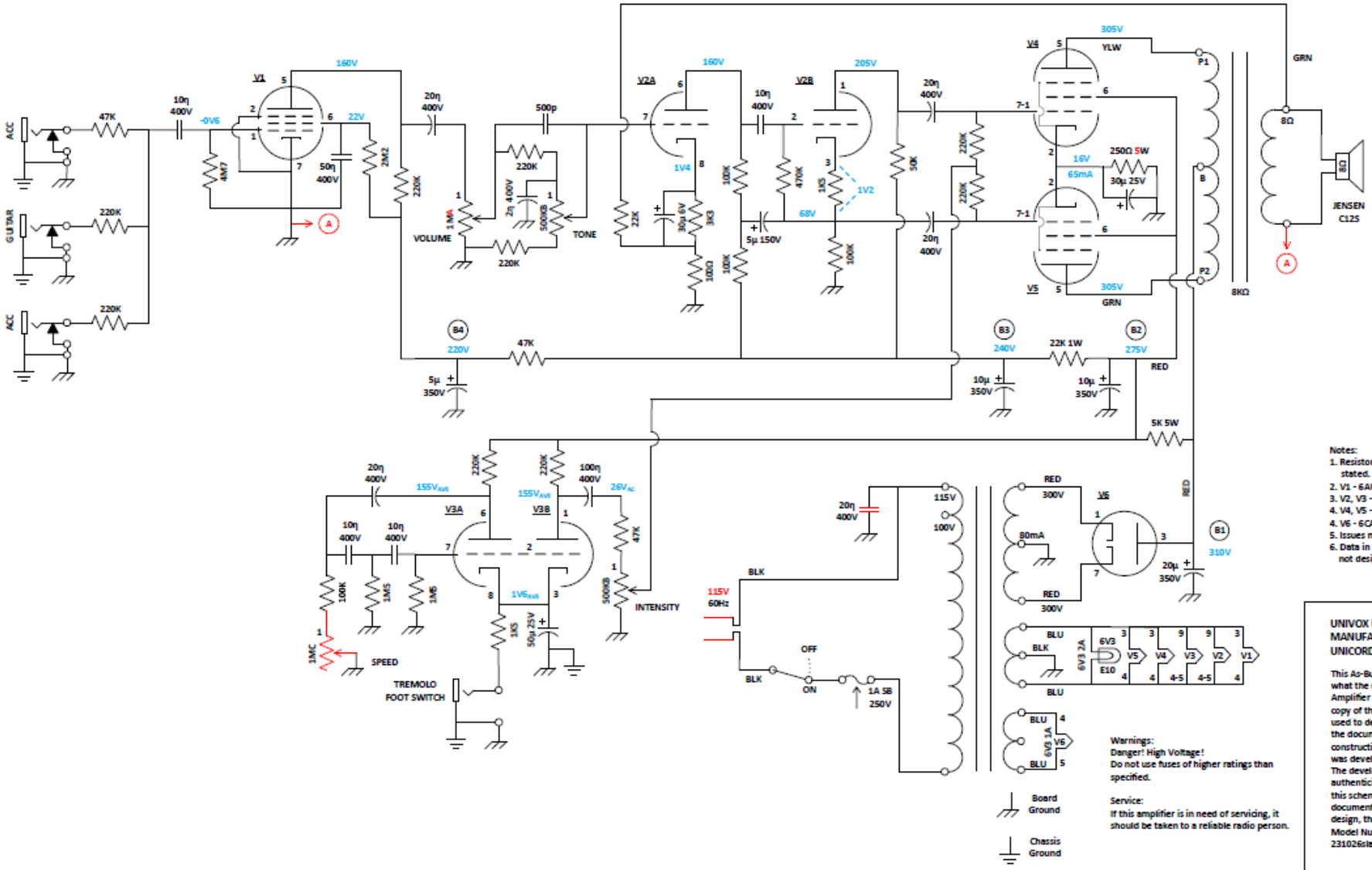

Notes:
1. Resistors 1/2W unless otherwise stated.
2. V1 - 6AU6
3. V2, V3 - 12AX7
4. V4, V5 - 6AQ5
4. V6 - 6CA4
5. Issues marked in RED
6. Data in BLUE are approximates, not design.

Warnings:
Danger! High Voltage!
Do not use fuses of higher ratings than specified.

Service:
If this amplifier is in need of servicing, it should be taken to a reliable radio person.

UNIVOX U-102
MANUFACTURED BY:
UNICORD CORP.

This As-Built schematic was developed from what the documenter believes is U-102 Amplifier SN-Unknown, made in Japan, and a copy of the original schematic. The amplifier used to develop this schematic appeared to the documenter to be original factory construction and components. This schematic was developed for reference purposes only. The developer makes no claims to the authenticity of the amplifiers used to develop this schematic, to the accuracy of this document, its representation of the original design, the stated Manufacturer, Make, Model Number or Country of Manufacture.
231026sla