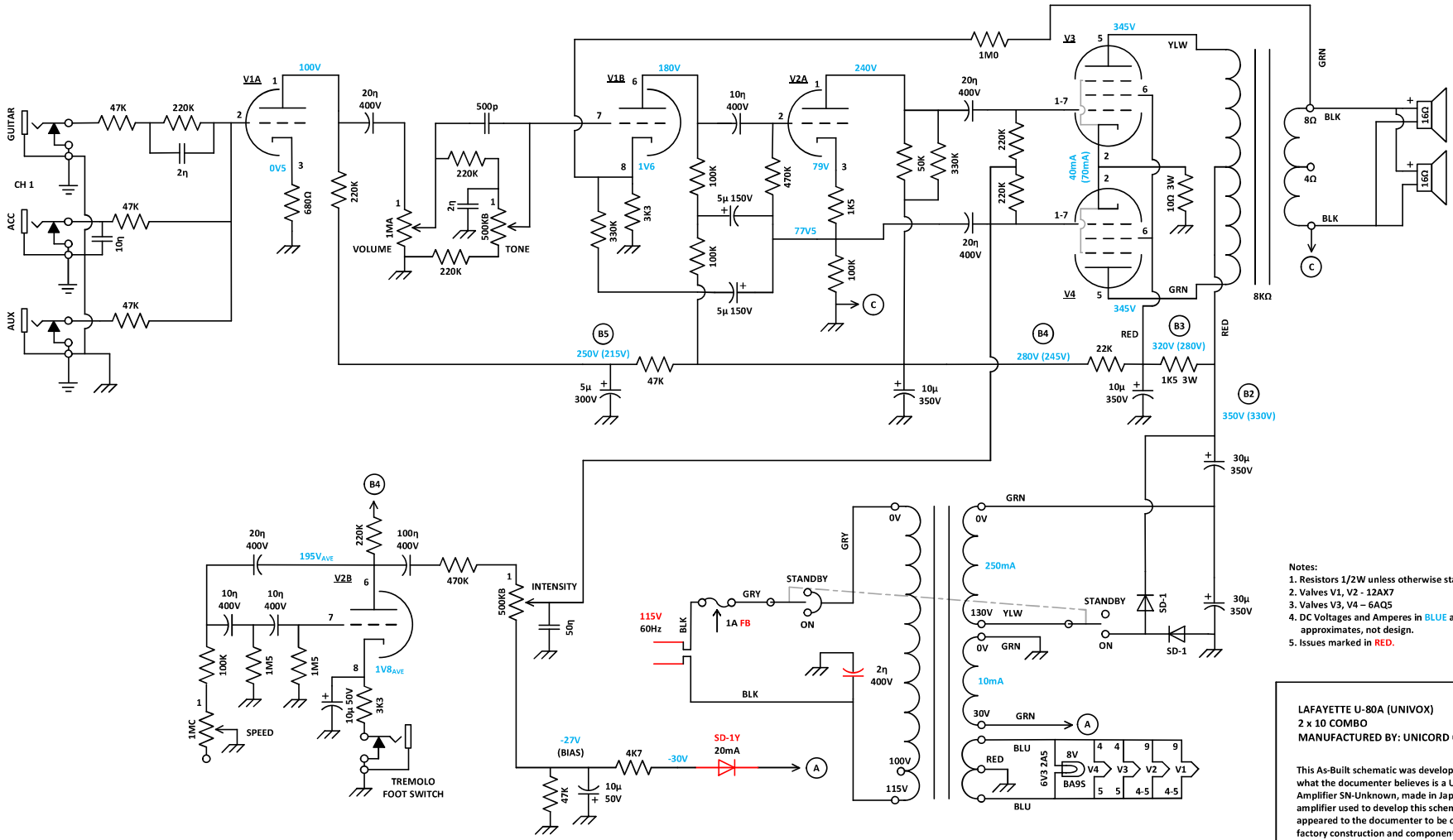

Notes:
1. Resistors 1/2W unless otherwise stated.
2. Valves V1, V2 - 12AX7
3. Valves V3, V4 – 6AQ5
4. DC Voltages and Amperes in BLUE are approximates, not design.
5. Issues marked in RED.

Chassis Ground

Board Ground

Warnings:
Danger! High Voltage!
Do not use fuses of higher ratings than specified.

Service:
If this amplifier is in need of servicing, it should be taken to a reliable radio person.

LAFAYETTE U-80A (UNIVOX)
2 x 10 COMBO
MANUFACTURED BY: UNICORD CORP.

This As-Built schematic was developed from what the documenter believes is a U-80A Amplifier SN-Unknown, made in Japan. The amplifier used to develop this schematic appeared to the documenter to be original factory construction and components. This schematic was developed for reference purposes only. The developer makes no claims to the authenticity of the amplifiers used to develop this schematic, to the accuracy of this document, its representation of the original design, the stated Manufacturer, Make, Model Number or Country of Manufacture. 240329sla