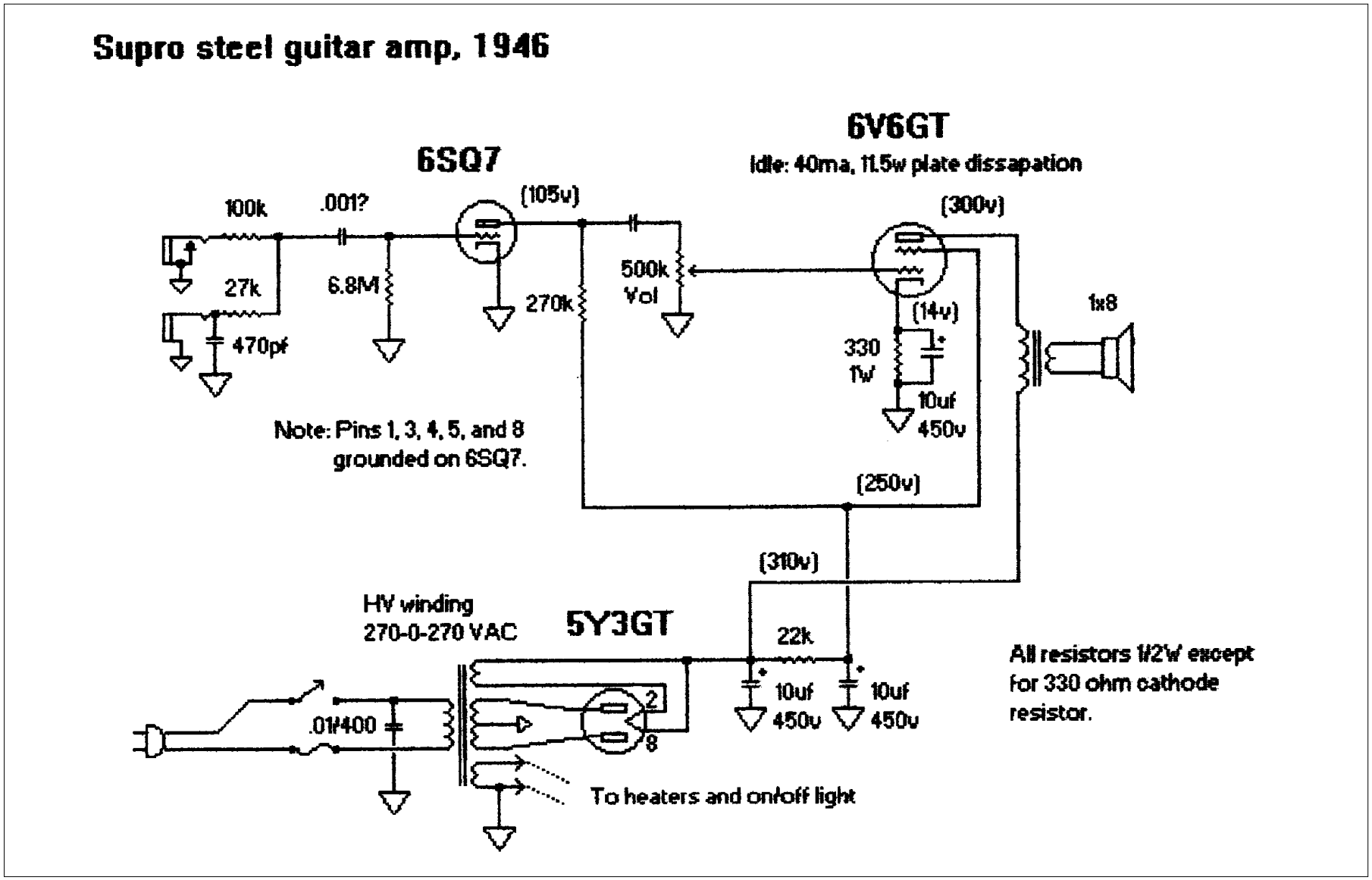
Supro steel guitar amp, 1946
6SQ7
6V6GT
Idle: 40ma, 11.5w plate dissapation
100k
.001?
(105v)
(300v)
27k
6.8M
500k
Vol
270k
(14v)
1x8
470pf
330
1w
10uf
450v
Note: Pins 1, 3, 4, 5, and 8
grounded on 6SQ7.
(250v)
(310v)
HV winding
270-0-270 VAC
5Y3GT
22k
All resistors 1/2W except
for 330 ohm cathode
resistor.
10uf
450v
10uf
450v
.01/400
2
8
To heaters and on/off light