REVISIONS			
REV.	DESCRIPTION	DATE	APPROVED
A	PR2515	18-DEC-12	S M M
B	EC5206	01-FEB-13	S M M

** = NOT ON PCB

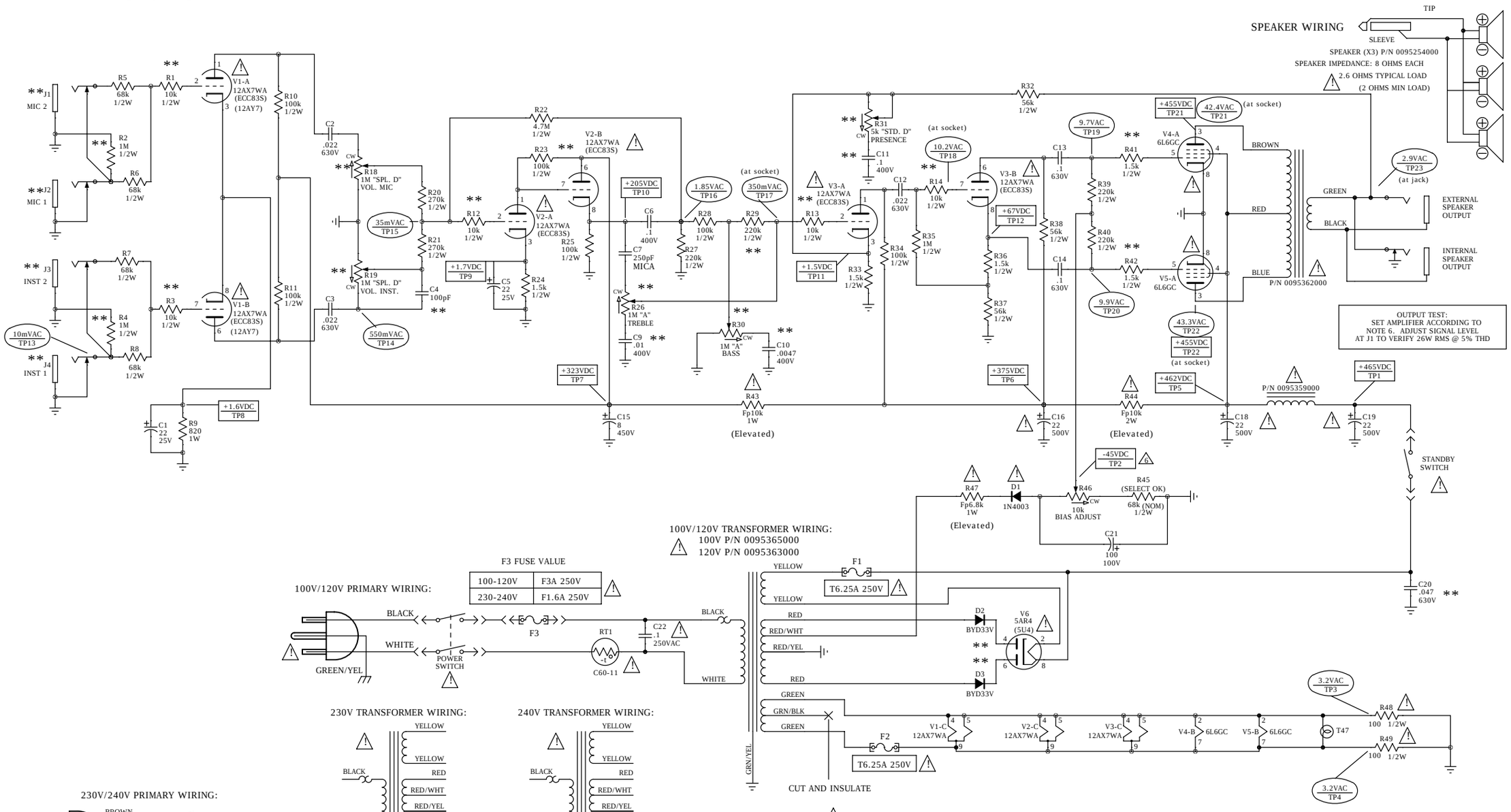

7. COMPONENTS NOTED WITH ⚠ SHALL BE REPLACED WITH FMIC APPROVED PARTS ONLY.

⚠6 BIAS ADJUSTMENT - NO SIGNAL APPLIED, RATED LINE VOLTAGE AT AC INPUT SET BIAS ADJUST POT R46 TO OBTAIN A CATHODE CURRENT OF 40mA. VOLTAGE SHOWN AT BIAS POT WIPER IS FOR REFERENCE ONLY.

5. ALL VOLTAGES MEASURED WITH RESPECT TO GROUND USING A DVM OF AT LEAST 1MEG AC INPUT IMPEDANCE AND 10MEG DC IMPEDANCE. VOLTAGES MAY VARY +/- 20%. TEST CONDITIONS:
UNIT AT RATED LINE VOLTAGE
2.6 OHM RESISTIVE LOAD CONNECTED AT SPEAKER OUT.
ALL PANEL CONTROLS AT 50% ROTATION.
BIAS SET TO ACCORDING TO NOTE 7.
ALL DC VOLTAGES MEASURED WITH NO INPUT SIGNAL.
ALL AC VOLTAGES MEASURED WITH A 10mVAC 1kHz SINEWAVE AT J4.

4. THIS SCHEMATIC IS FOR PCB FABRICATION P/N 0095366000 AND PCB ASSEMBLY P/N 0095360000.

3. ALL POLARIZED CAPACITORS IN uF, 20%; 50V MINIMUM.

2. ALL UNPOLARIZED CAPACITORS IN uF, 10% OR BETTER; 50V MINIMUM. (POWER SUPPLY BYPASS CAPACITORS ARE 20%).

1. ALL RESISTORS IN OHMS, 5%.

NOTES: (UNLESS OTHERWISE NOTED)

THIS DOCUMENT CONTAINS INFORMATION OF A PROPRIETARY NATURE TO FENDER MUSICAL INSTRUMENTS AND IS SUBMITTED TO YOU IN CONFIDENCE AND SHALL NOT BE DISCLOSED OR TRANSMITTED TO OTHERS WITHOUT AUTHORIZATION FROM FENDER MUSICAL INSTRUMENTS.

Fender® MUSICAL INSTRUMENTS
Corona, CA U.S.A.

CHECKED BY: _____
DATE: _____
APPROVED BY: _____
DATE: _____

TITLE: SERVICE DIAGRAM, COMBINED (schematic)
57 BANDMASTER

SIZE	DRAWING NUMBER	REV.
C	0095660000	B

DRAWN: GIT'LO | ENGR: GIT'LO
DATABASE FILE: Z2515S.SCH
RELEASE DATE: 18 DEC 2012 | SHEET: 1 OF 2

REVISIONS			
REV.	DESCRIPTION	DATE	APPROVED
A	PR2515	14-DEC-12	S M M
B	EC 5206	01-FEB-13	S M M

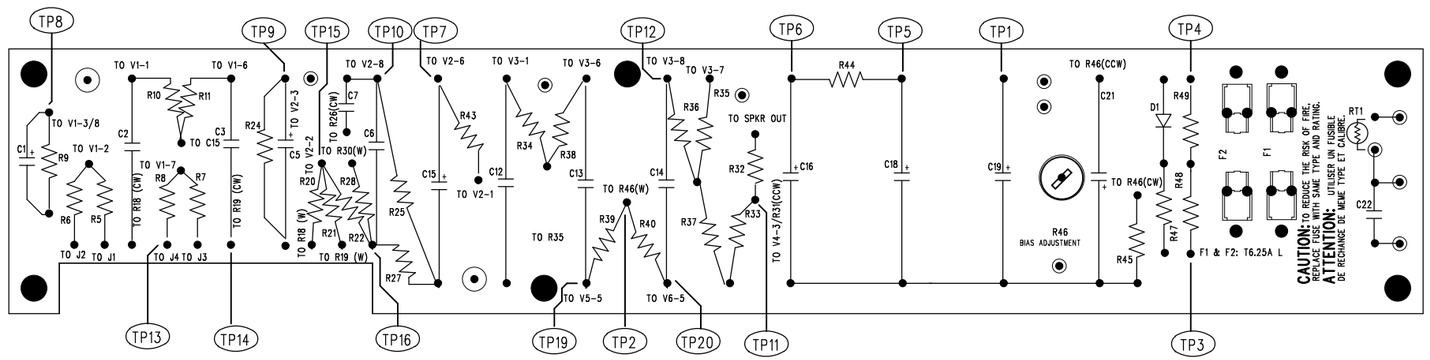

FILM/DWG:	SERVICE DIAGRAM	
DATABASE:	Z2515P.PCB	DATE: 14-DEC-12

2. SEE PAGE 1 FOR NOTES AND TEST CONDITIONS
1. WIRES NOT SHOWN FOR CLARITY

NOTES: (UNLESS OTHERWISE NOTED)

THIS DOCUMENT CONTAINS INFORMATION OF A PROPRIETARY NATURE TO FENDER MUSICAL INSTRUMENTS AND IS SUBMITTED TO YOU IN CONFIDENCE AND SHALL NOT BE DISCLOSED OR TRANSMITTED TO OTHERS WITHOUT AUTHORIZATION FROM FENDER MUSICAL INSTRUMENTS.

CHECKED BY: _____
DATE: _____
APPROVED BY: _____
DATE: _____

DRAWN: GIT'LO	ENGR: GIT'LO
DATABASE FILE:	Z2515P.PCB

Fender® MUSICAL INSTRUMENTS
Corona, CA U.S.A.

TITLE: SERVICE DIAGRAM, COMBINED (PCB assy)
57 BANDMASTER

SIZE	DRAWING NUMBER	REV.
C	0095660000	B

RELEASE DATE: 17 DEC 2012 SHEET 2 OF 2