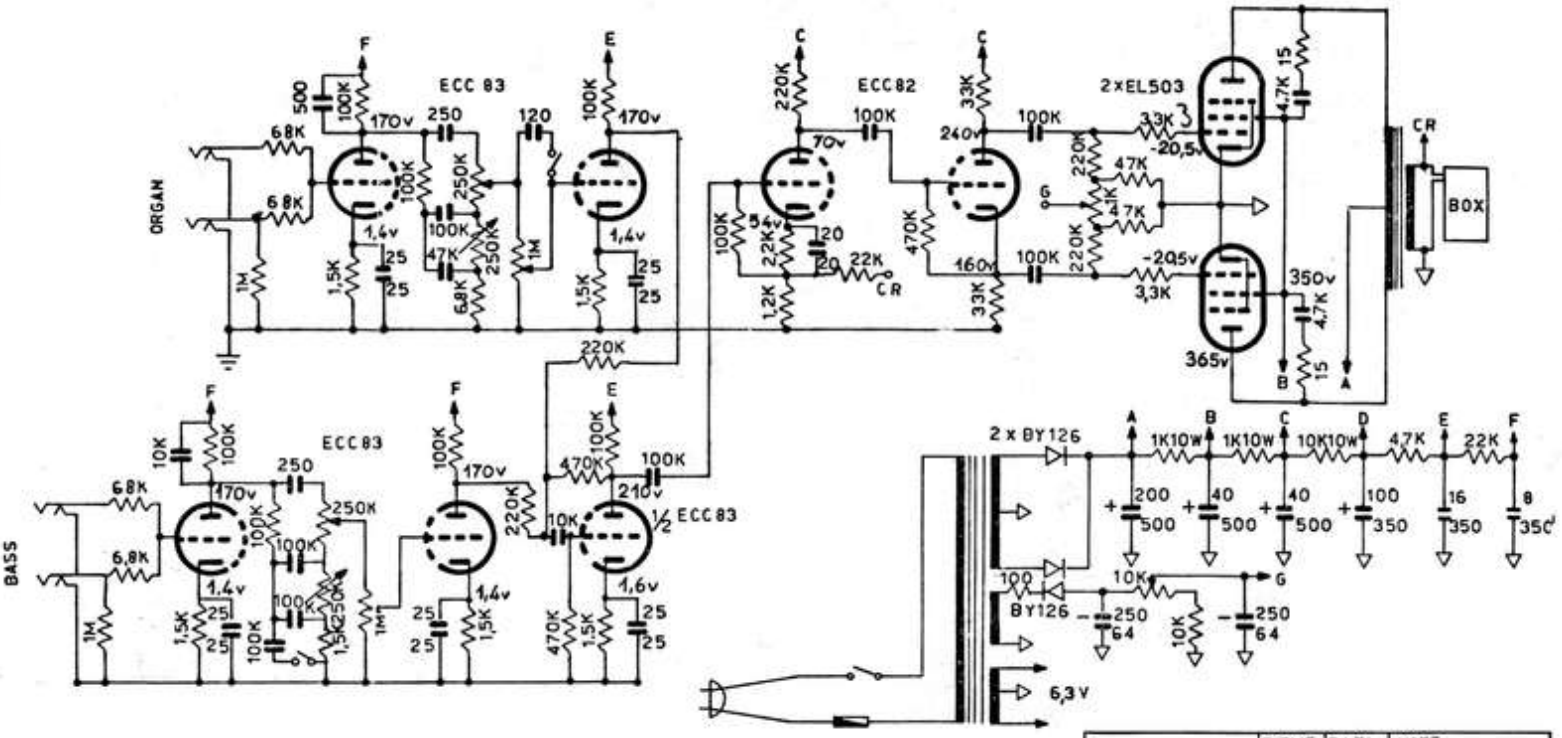

FBT	FIRME	DATA	NOTE:
	DIS.		FOR THE MOD.
	LUC.		SPECIAL TWO
	VER.		DIFFERENT SPEA
BASSORGAN			KERS CABINET
BR500			