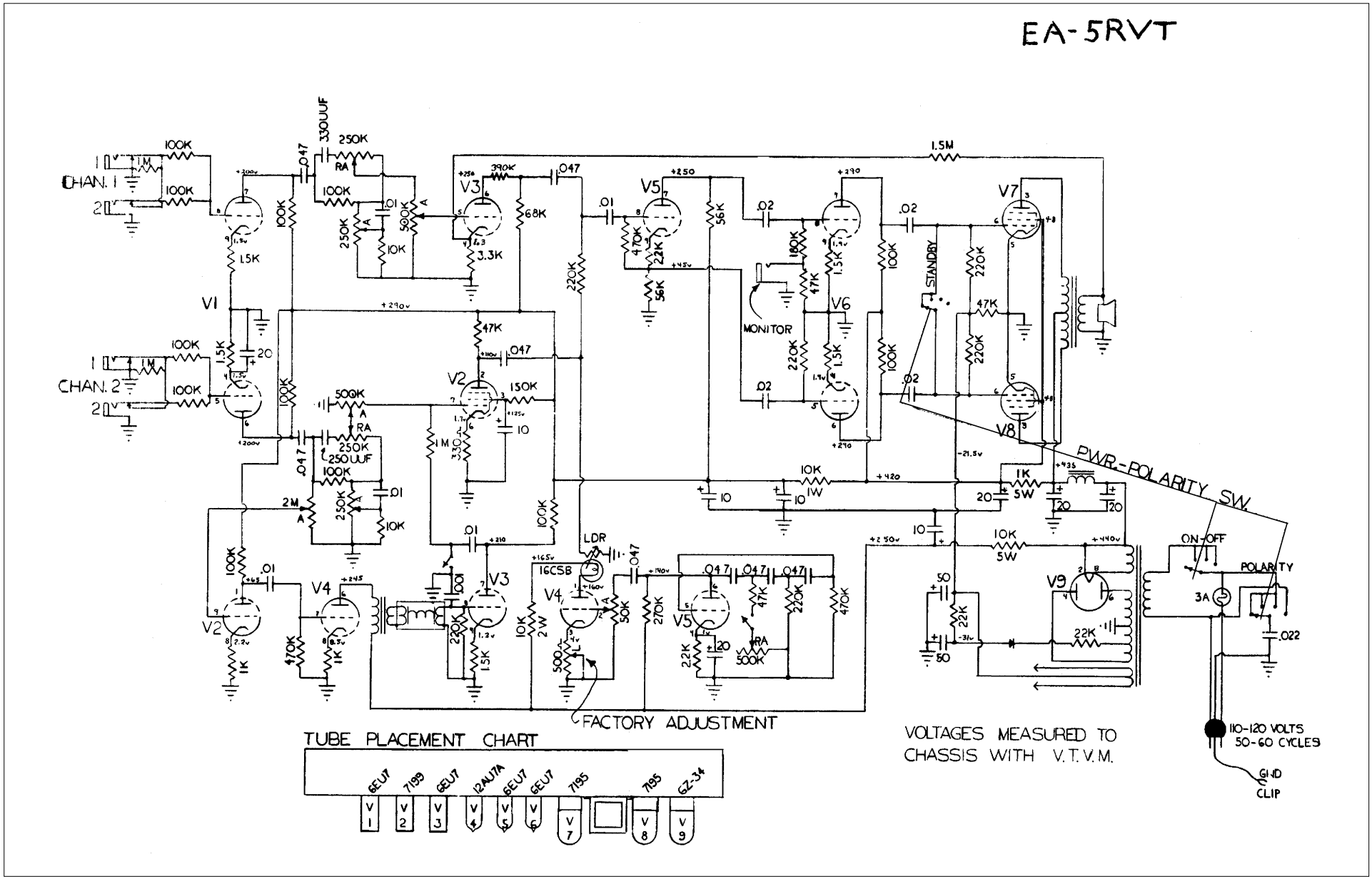
EA-5RVT
CHAN. 1
CHAN. 2
V1
V2
V3
V4
V5
V6
V7
V8
V9
MONITOR
STANDBY
PWR.-POLARITY SW.
ON-OFF
POLARITY
3A
LDR
16CSB
FACTORY ADJUSTMENT
TUBE PLACEMENT CHART
6EU7
7199
6EU7
12AU7A
6EU7
6EU7
7195
7195
GZ-34
VOLTAGES MEASURED TO CHASSIS WITH V.T.V.M.
110-120 VOLTS 50-60 CYCLES
GND CLIP