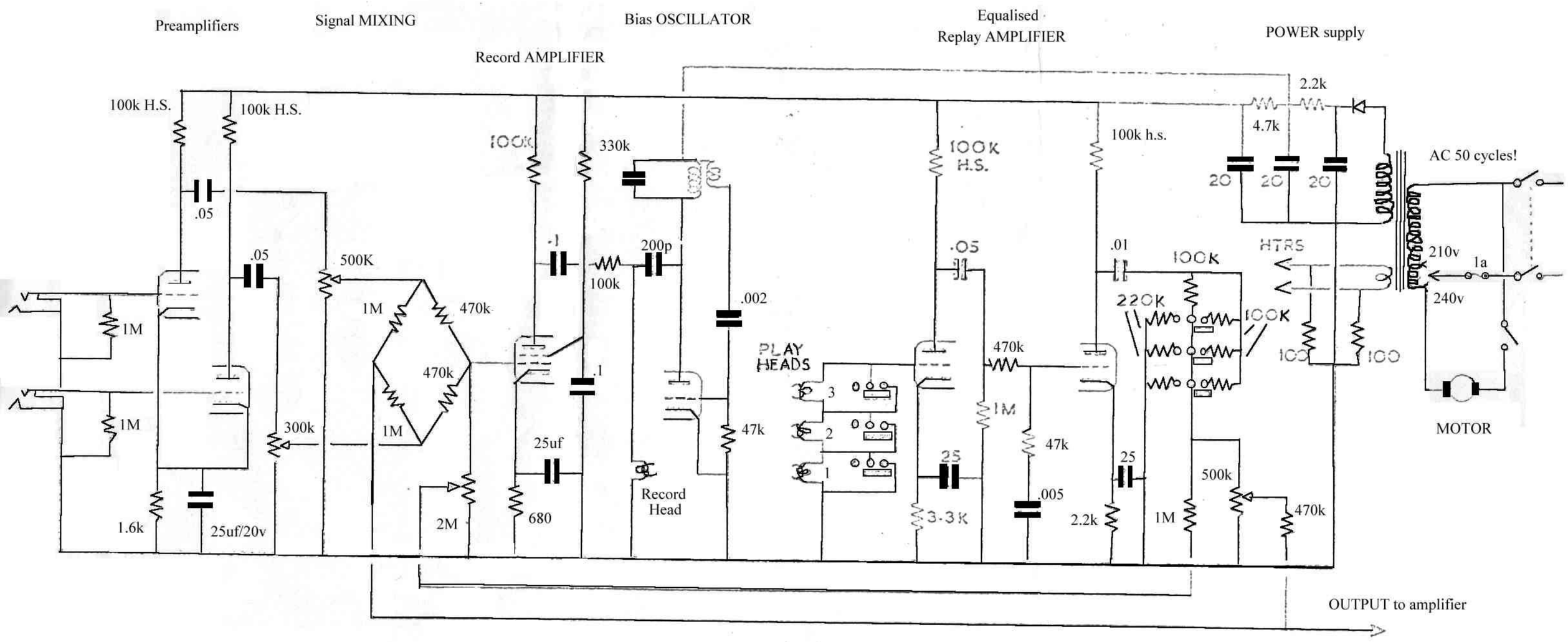

COPICAT ECHO

WATKINS electric music LONDON