Colorsound Tone Bender

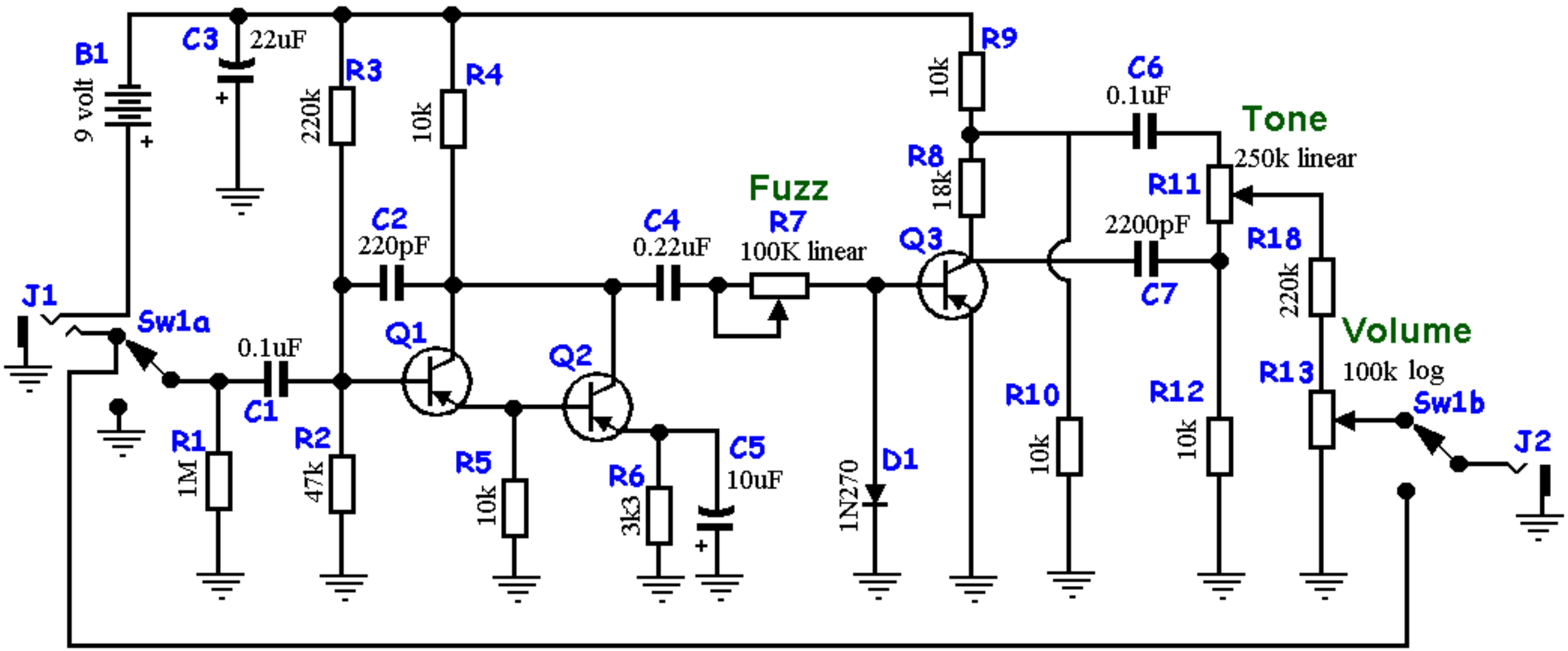

Drawn by: JD Sleep

Revision: 2002-05-18

Copyright 2002 JD Sleep

Guitar Effects Projects

Permission refused for posting/serving this diagram from any site other than Guitar Effects Projects