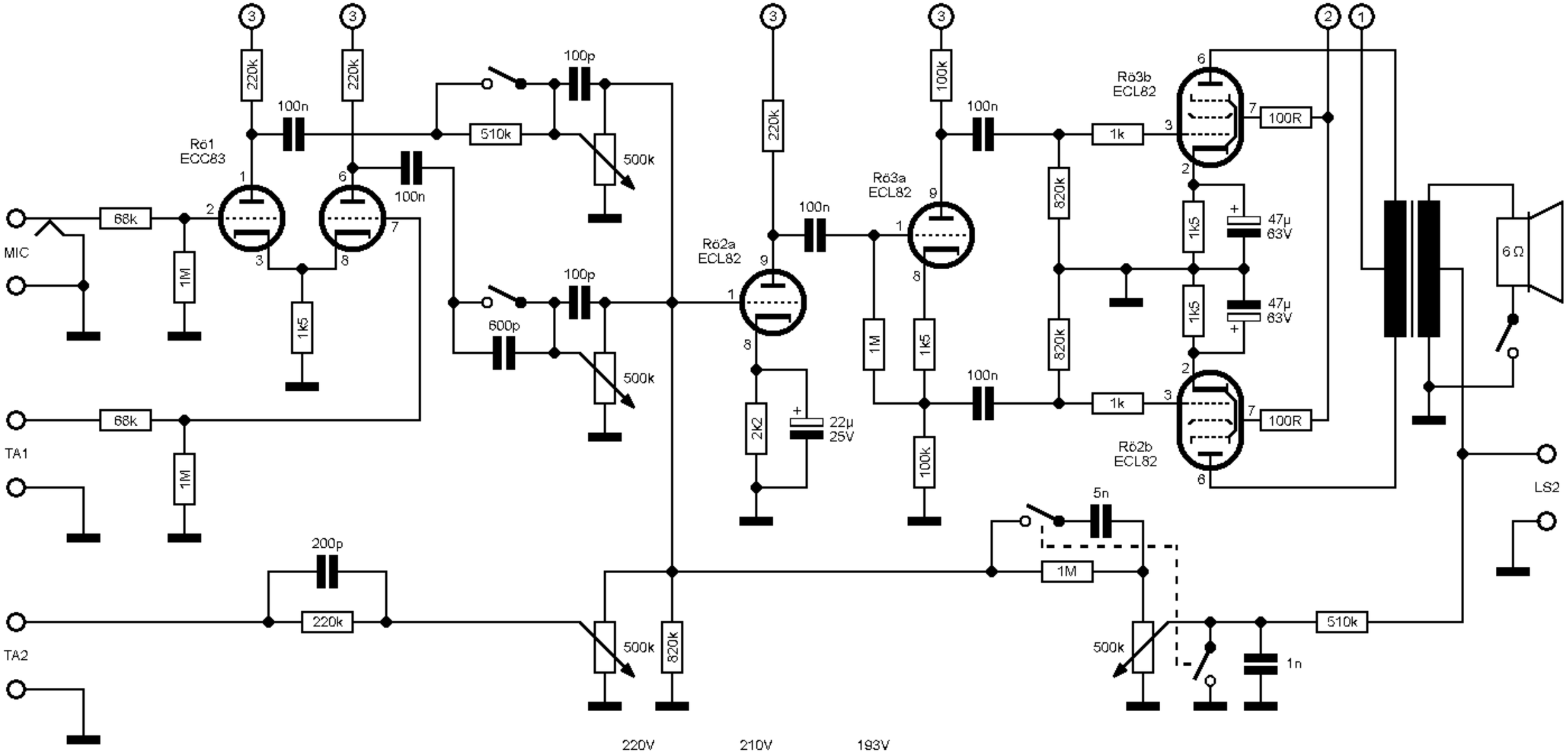

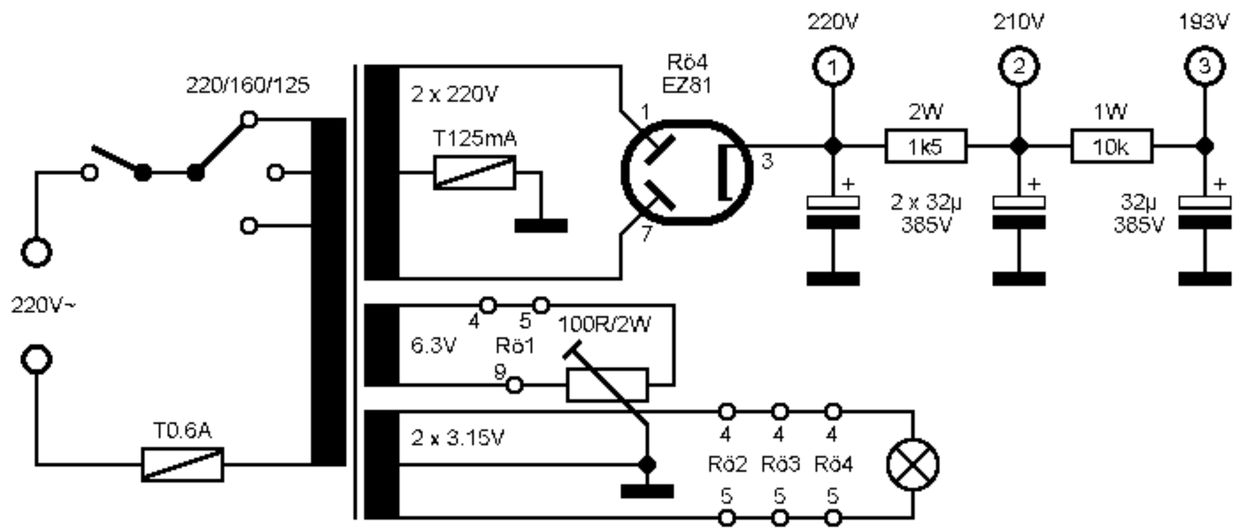

DYNACORD KV10

(c) Albert Kreuzer 2003
www.albertkreuzer.com