THE I. T. VERDIN COMPANY
551 Dandridge St. Cincinnati, Ohio

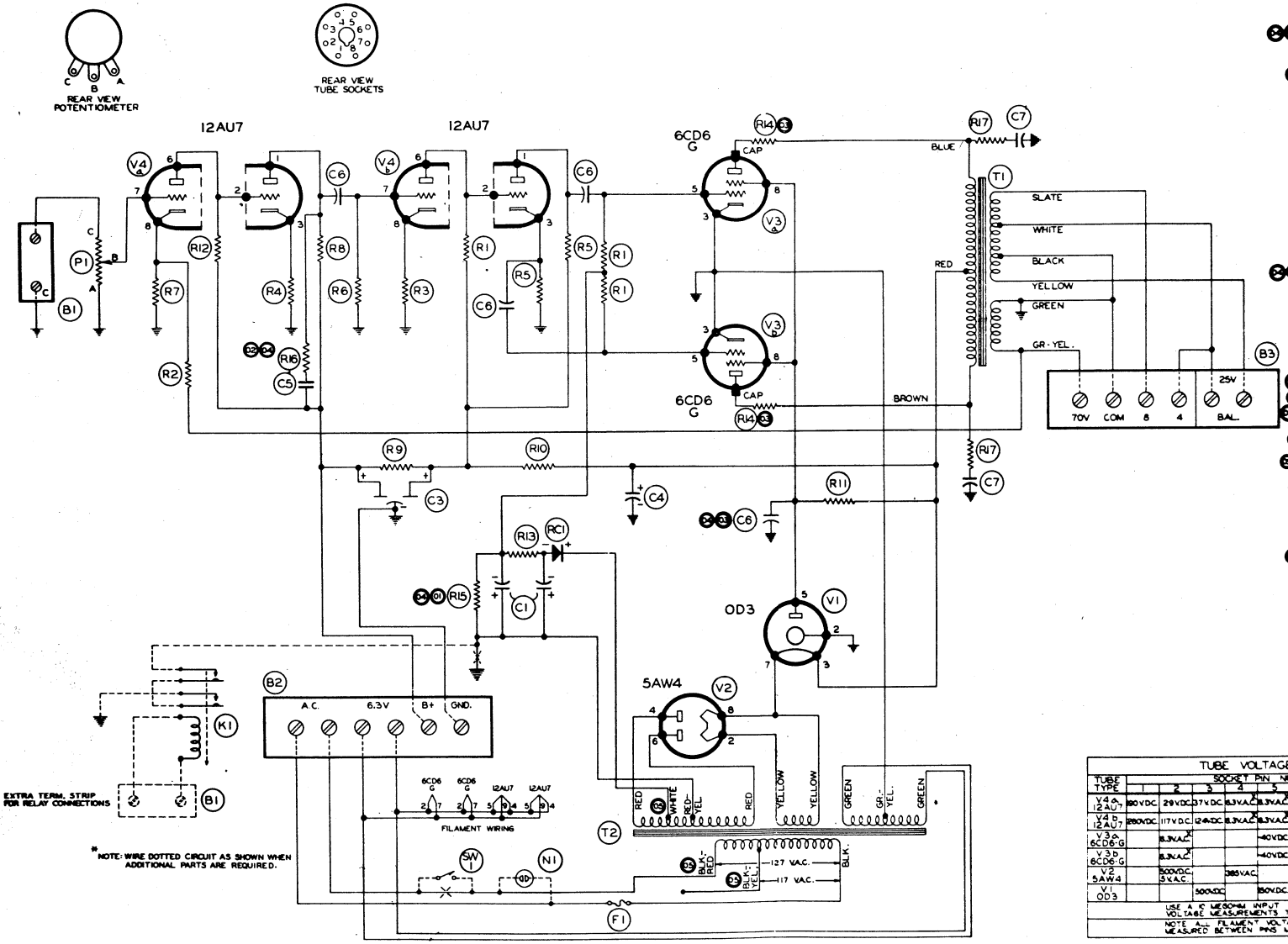

*NOTE: WIRE DOTTED CIRCUIT AS SHOWN WHEN ADDITIONAL PARTS ARE REQUIRED.

LIST OF ELECTRICAL PARTS

LEGEND	DESCRIPTION	NO. REQD.	PART NO.
C1	CAPACITOR 20 MFD. 150 V.	2	188-2039-203
C3	" 20-20 " 500 V.	1	188-2914
C4	" 16 " 800 V.	1	188-2843
C5	" .00035 " 500 V.	1	199-2021-331
C6	" .25 " 400 V.	4	199-4025-254
C7	" .003 " 1600 V.	2	199-4080-202
V1	ELECTRON TUBE OD3	1	262-OD3
V2	" 5AW4	1	262-5AW4
V3	" 6CD6 G	2	262-6CD6 G
V4	" 12AU7	2	262-12AU7
F1	FUSE 3 AMPERE	1	320-835-0300
	FUSE HOLDER	1	321-10
* N1	LAMP - NEON	1	566-52
RC1	RECTIFIER-SELENIUM 65 MA.	1	595-10
* K1	RELAY 81 OHMS 24 V.A.C. DPST	1	596-30
R1	RESISTOR 100,000 OHM 1 W.	3	600-0116-104
R2	" 120,000 " "	1	600-0116-124
R3	" 1,500 " "	1	600-0116-152
R4	" 15,000 " "	1	600-0116-153
R5	" 33,000 " "	2	600-0116-333
R6	" 470,000 " "	1	600-0116-474
R7	" 560 " "	1	600-0116-561
R8	" 68,000 " "	1	600-0116-683
R9	" 10,000 " 2 W.	1	600-0153-103
R10	" 10,000 " 5 W.	1	600-1008-103
R11	" 10,000 " 25 W.	1	600-1014-103
R12	" 270,000 " 1 W.	1	600-0116-274
R13	" 1,000 " 1 W.	1	600-0116-102
R14	" 47 " 1 W.	2	600-0116-470
R15	" 27,000 " 1 W.	1	600-0116-273
R16	" 4,700 " 1 W.	1	600-0116-472
R17	" 1,000 " 10 W.	2	600-1012-102
SW1	SWITCH S.P.S.T. A.C. LINE	1	650-102
B1	TERMINAL STRIP " INPUT "	2	703-258
B2	" " A.C. "	1	703-218
B3	" " OUTPUT "	1	703-219
P1	POTENTIOMETER 100,000 OHM	1	601-58
T1	TRANSFORMER " OUTPUT "	1	710-2052
T2	" " POWER "	1	710-4094-02

TUBE VOLTAGES

TUBE TYPE	SOCKET PIN NUMBERS 1	2	3	4	5	6	7	8	9
V4a 12AU7	180 V.D.C.	29 V.D.C.	37 V.D.C.	6.3 V.A.C.	6.3 V.A.C.	29 V.D.C.		7 V.D.C.	6.3 V.A.C.
V4b 12AU7	280 V.D.C.	117 V.D.C.	124 V.D.C.	6.3 V.A.C.	6.3 V.A.C.	117 V.D.C.		4.15 V.D.C.	6.3 V.A.C.
V3a 6CD6-G		6.3 V.A.C.			-40 V.D.C.		6.3 V.A.C.	150 V.D.C.	
V3b 6CD6-G		6.3 V.A.C.			-40 V.D.C.		6.3 V.A.C.	150 V.D.C.	
V2 5AW4		500 V.D.C. 5 V.A.C.		385 V.A.C.		385 V.A.C.		500 V.D.C. 5 V.A.C.	
V1 OD3			500 V.D.C.		150 V.D.C.		500 V.D.C.		

USE A 10 MEGOHM INPUT V.T.V.M. FOR VOLTAGE MEASUREMENTS TO GROUND.

NOTE A.C. FILAMENT VOLTAGES MEASURED BETWEEN PINS MARKED + AND K

SCHEMATIC DIAGRAM
MODEL 1A435
MED-POWER PROGRAM AMP
30-40 WATT

SCALE
DATE 3-7-54
DRAWN
CHECKED
190-471