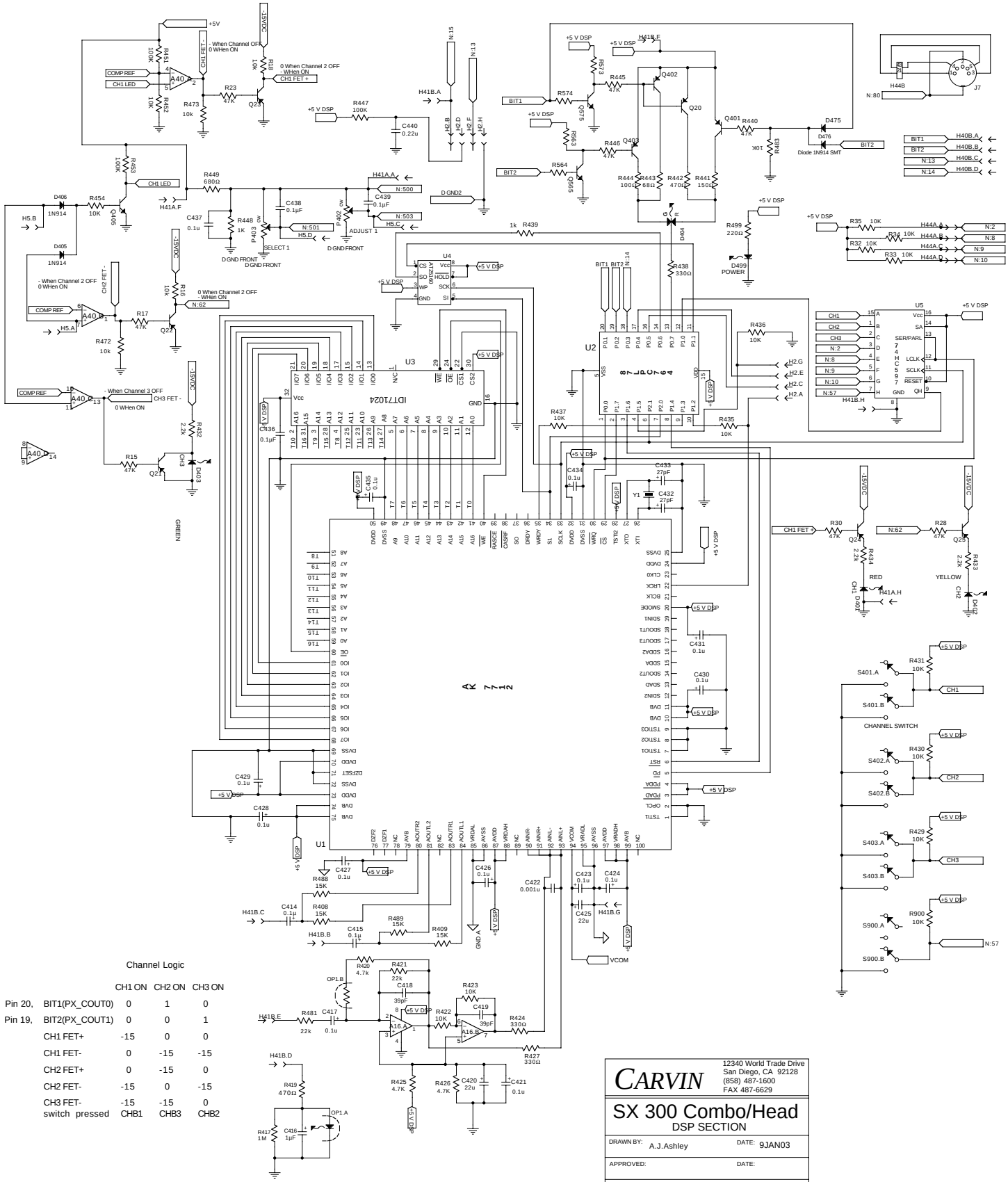

Channel Logic

		CH1 ON	CH2 ON	CH3 ON
Pin 20,	BIT1(PX_COUT0)	0	1	0
Pin 19,	BIT2(PX_COUT1)	0	0	1
	CH1 FET+	-15	0	0
	CH1 FET-	0	-15	-15
	CH2 FET+	0	-15	0
	CH2 FET-	-15	0	-15
	CH3 FET-	-15	-15	0
	switch pressed	CHB1	CHB3	CHB2

CARVIN
12340 World Trade Drive
San Diego, CA 92128
(858) 487-1600
FAX 487-6629

SX 300 Combo/Head

DSP SECTION

DRAWN BY:	A.J.Ashley	DATE:	9JAN03
APPROVED:		DATE:	
PCB NO:	30- 03300	REV:	B
ASSY. NO:	80- 03300	REV:	A
REVISED BY:		DATE:	