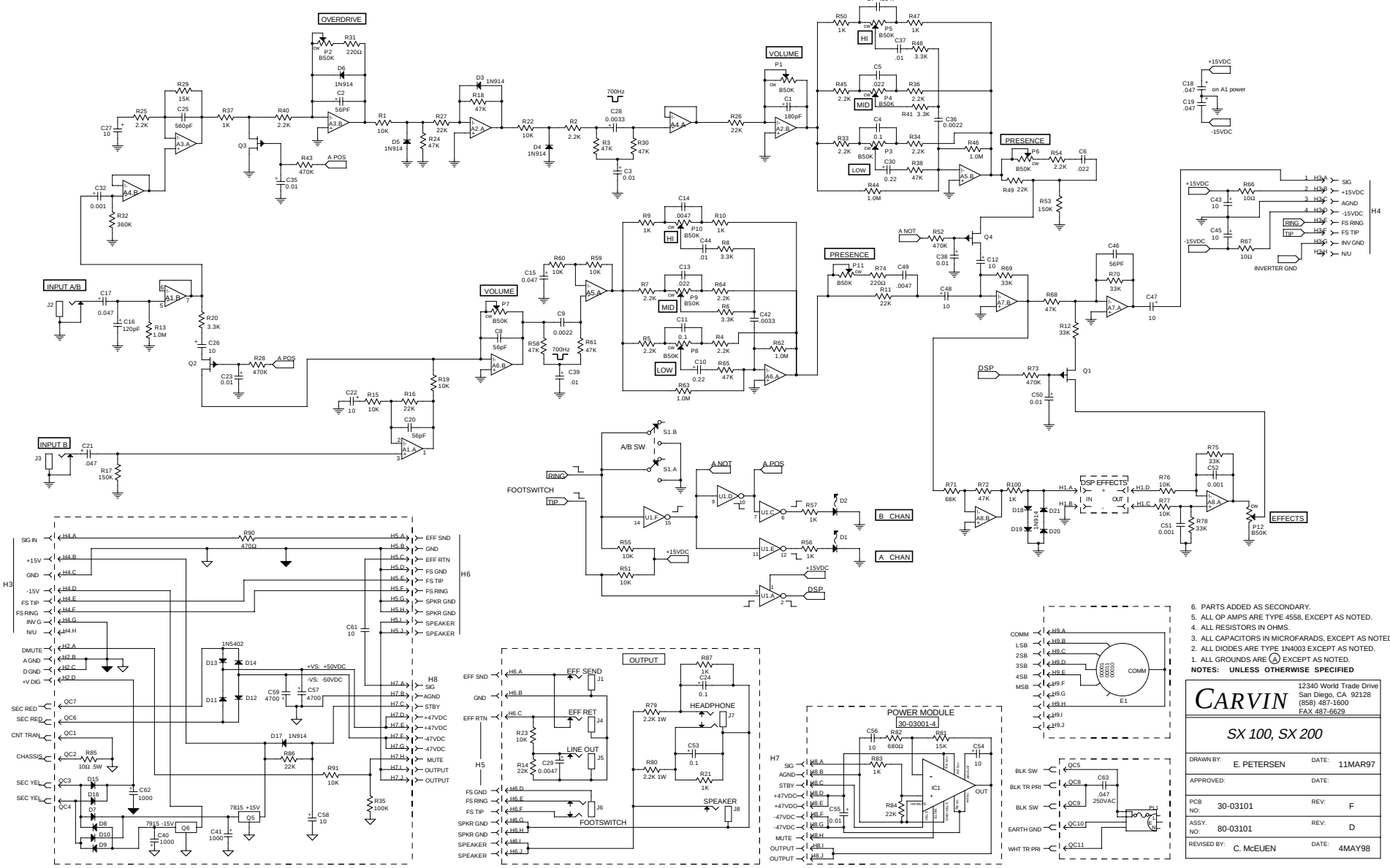

6. PARTS ADDED AS SECONDARY.
5. ALL OP AMPS ARE TYPE 4558, EXCEPT AS NOTED.
4. ALL RESISTORS IN OHMS.
3. ALL CAPACITORS IN MICROFARADS, EXCEPT AS NOTED
2. ALL DIODES ARE TYPE 1N4003 EXCEPT AS NOTED.
1. ALL GROUNDS ARE Ⓐ EXCEPT AS NOTED.

NOTES: UNLESS OTHERWISE SPECIFIED

CARVIN
12340 World Trade Drive
San Diego, CA 92128
(858) 487-1600
FAX 487-6629

SX 100, SX 200

DRAWN BY:	E. PETERSEN	DATE:	11MAR97
APPROVED:		DATE:	
PCB NO:	30-03101	REV:	F
ASSY. NO:	80-03101	REV:	D
REVISED BY:	C. McEUEN	DATE:	4MAY98