NOTE: B1 IS CUT, AND B2 INSTALLED FOR 240V.
B2 IS CUT, AND B1 INSTALLED FOR 120V ONLY.

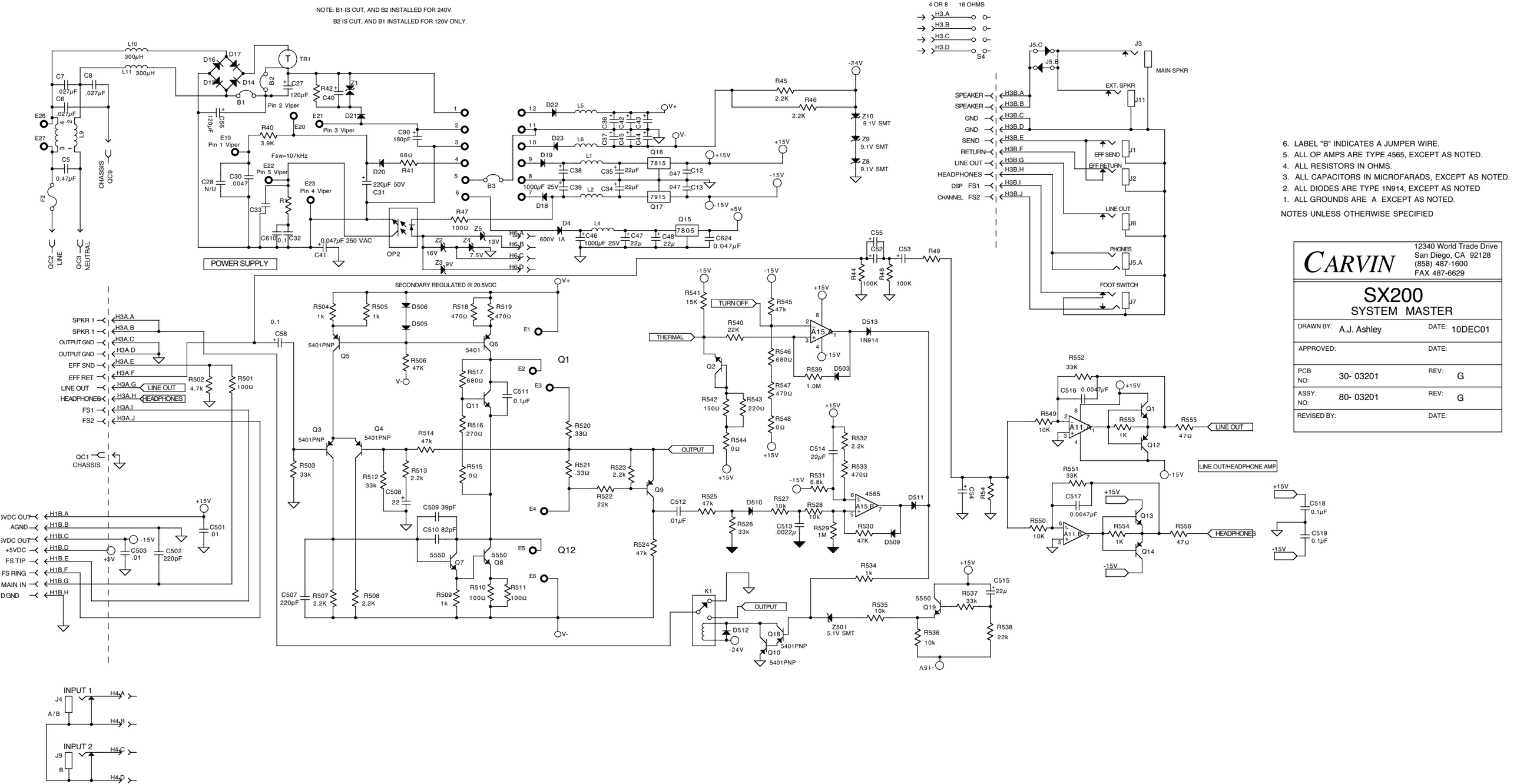

6. LABEL "B" INDICATES A JUMPER WIRE.
5. ALL OP AMPS ARE TYPE 4565, EXCEPT AS NOTED.
4. ALL RESISTORS IN OHMS.
3. ALL CAPACITORS IN MICROFARADS, EXCEPT AS NOTED.
2. ALL DIODES ARE TYPE 1N914, EXCEPT AS NOTED
1. ALL GROUNDS ARE A EXCEPT AS NOTED.

NOTES UNLESS OTHERWISE SPECIFIED

CARVIN
12340 World Trade Drive
San Diego, CA 92128
(858) 487-1600
FAX 487-6629

SX200
SYSTEM MASTER

DRAWN BY:	A.J. Ashley	DATE:	10DEC01
APPROVED:		DATE:	
PCB NO:	30- 03201	REV:	G
ASSY. NO:	80- 03201	REV:	G
REVISED BY:		DATE:	