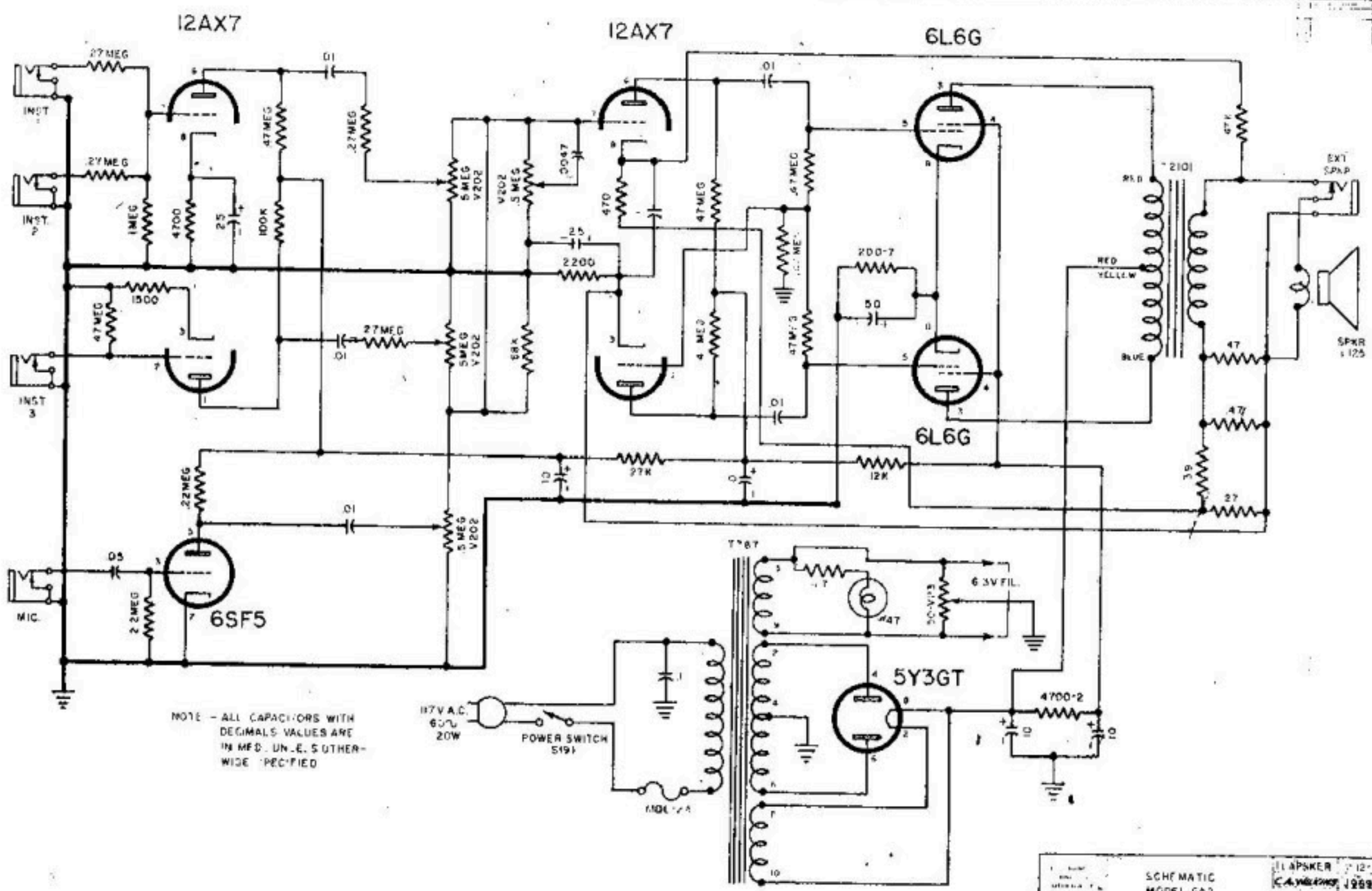
12AX7
12AX7
6L6G
6L6G
6SF5
5Y3GT
INST 1
INST 2
INST 3
MIC
EXT SPKR
SPKR 1125
POWER SWITCH 5191
117V A.C. 60~ 20W
6.3V FIL.
NOTE - ALL CAPACITORS WITH DECIMALS VALUES ARE IN MFD. UNLESS OTHERWISE SPECIFIED
SCHEMATIC MODEL GA2
DAVID BOGEN CO. INC.
969 08
3