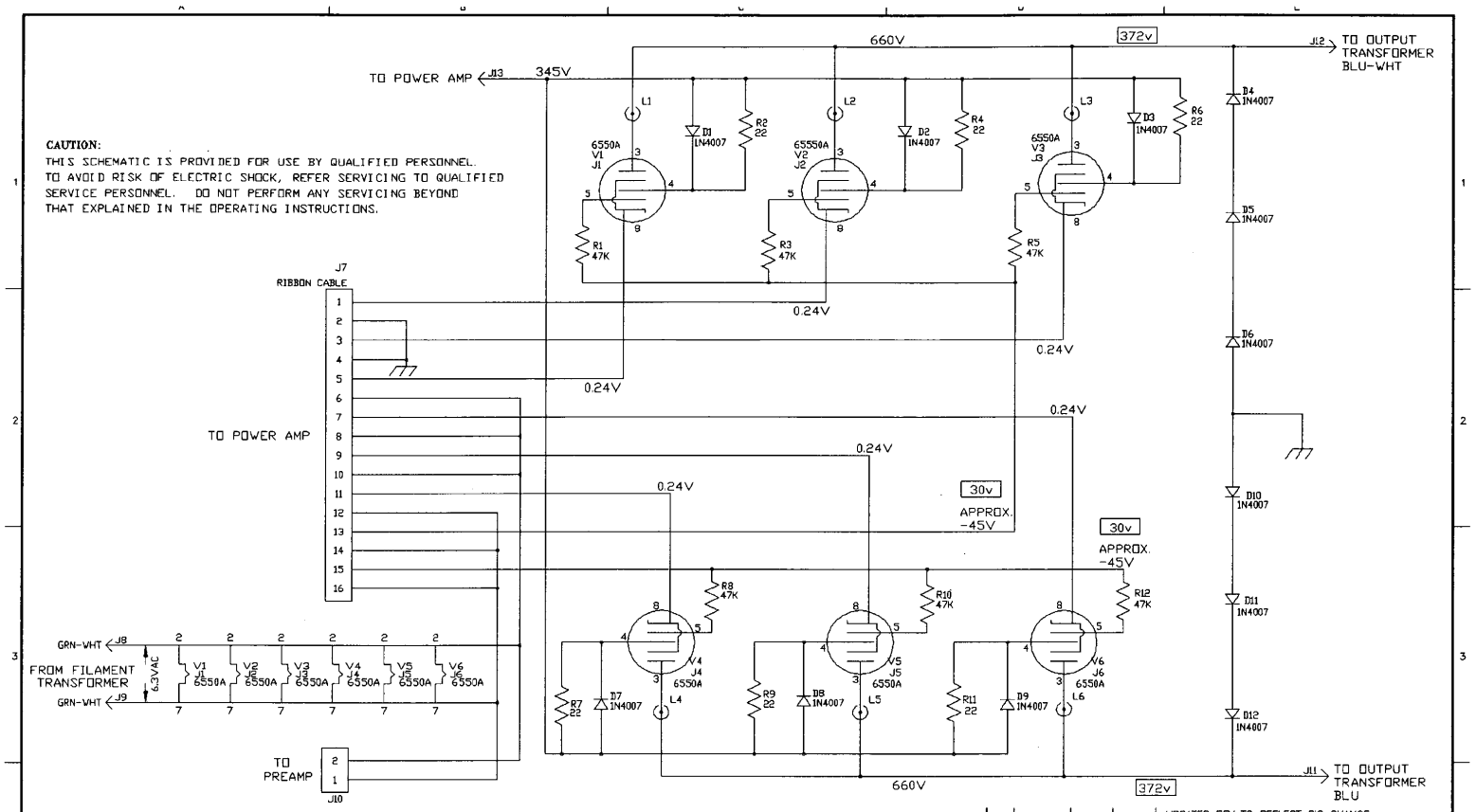

NOTES

1) CAUTION: SHOCK HAZARD!!
THIS UNIT CONTAINS HAZARDOUS VOLTAGE. DISCONNECT POWER AND BE SURE POWER SUPPLY IS DISCHARGED BEFORE TOUCHING INTERNAL PARTS.

2) UNLESS NOTED, RESISTOR VALUES IN OHMS, 1/4W-5% TOL. CAPACITOR VALUES IN MICROFARADS, 50V-10% TOL.

3) VOLTAGES ARE MEASURED WITH 1 MEGOHM OSCILLOSCOPE AND 10 MEGOHM DIGITAL VOLTMETER. VOLTAGES IN RECTANGLES ARE RMS SIGNAL VOLTAGES WITH FULL POWER OUTPUT. OTHER VOLTAGES ARE DC WITH NO SIGNAL.

REV	DATE	BY	CHK'D	DESCRIPTION
3	08/30/96	LMA		UPDATED REV TO REFLECT PIC CHANGE E960333
2	05/16/94	LMA		REV CHG TO REFLECT JUMPER CHG PER E150
1				

SIGNATURES:		DATE:
DRAWN:	SWR	03/02/93
CHK'D:		
APP'D:		
ORIGINAL ISSUED:		
PLOT DATE:		09/03/96
PLOT TIME:		07:16:59
FILE NAME:		41941h3z

11880 BORMAN DR.
ST. LOUIS, MISSOURI
63146

PROJECT NAME: SVT-2 PRO

DRAWING NAME: TUBE Bd. SCHEMATIC

DRAWING NO. 07S419-41

SCALE: 1:1 SHEET: 1 OF 1 REV 3