EITEL-McCULLOUGH, INC.
SAN BRUNO, CALIFORNIA

3X12500A3

Medium Mu Triode

The Eimac 3X12500A3 is a medium-mu, forced-air cooled, external anode transmitting triode incorporating features which make it suitable for effective use at frequencies well into the vhf region, as well as at lower frequencies. Close electrode spacings and maximum utilization of electrode areas are made possible through the multi-unit design, which allows the production of high power at exceptionally low plate voltage, thus reducing circuit losses to an insignificant amount.

As a push-pull grounded-grid 110-Mc FM amplifier, a pair of 3X12500A3's will deliver a useful output of over 50 kilowatts at a plate voltage of 3700 volts. As a conventional grounded-filament amplifier, a power output of 30 kilowatts per tube may be obtained in class-C telegraphy service.

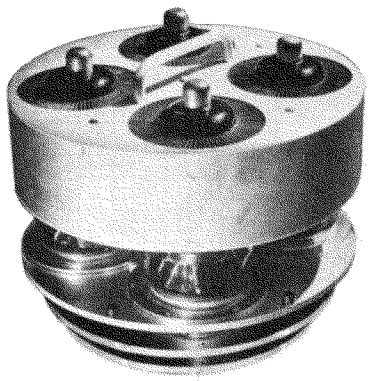

GENERAL CHARACTERISTICS

ELECTRICAL

Filament: Thoriated tungsten		
Voltage	7.5	volts
Current	192	amperes
Maximum starting current	400	amperes
Amplification Factor (Average)	20	
Direct Interelectrode Capacitances (Average)		
Grid-Plate	95	μμf.
Grid Filament	240	μμf.
Plate Filament	5	μμf.
Transconductance (e_b=3000 v., i_b=4 a.)	80,000	μmhos

MECHANICAL

Cooling	Forced air[1]	
Maximum Overall Dimensions		
Length	9.5	inches
Diameter	11.1	inches
Net Weight	32	pounds
Shipping Weight (Average)	80	pounds

RADIO FREQUENCY POWER AMPLIFIER
Grounded-Grid Circuit

Class-C FM Telephony or Telegraphy

MAXIMUM RATINGS (Frequencies below 110 Mc.)

D-C PLATE VOLTAGE	4000 MAX. VOLTS
D-C PLATE CURRENT	8 MAX. AMPS.
PLATE DISSIPATION[1]	12,500 MAX. WATTS
GRID DISSIPATION	600 MAX. WATTS

TYPICAL OPERATION (110 Mc., per tube)

D-C Plate Voltage	3700	4000	volts
D-C Grid Voltage	−450	−550	volts
D-C Plate Current	7.2	7.4	amps.
D-C Grid Current	0.9	1.1	amps
Driving Power (approx.)	6.4	7.6	kw
Useful Power Output	27.4	30	kw

RADIO FREQUENCY POWER AMPLIFIER OR OSCILLATOR
Grounded-Filament Circuit

Class-C Telegraphy (Key-down conditions, per tube)

MAXIMUM RATINGS (Frequencies below 85 Mc.)

D-C PLATE VOLTAGE	5000 MAX. VOLTS
D-C PLATE CURRENT	8 MAX. AMPS.
PLATE DISSIPATION[1]	12,500 MAX. WATTS
GRID DISSIPATION	600 MAX. WATTS

TYPICAL OPERATION (Frequencies below 50 Mc., per tube)

D-C Plate Voltage	3500	4000	5000	volts
D-C Grid Voltage	−420	−360	−400	volts
D-C Plate Current	7.2	6.4	8	amps
D-C Grid Current	2	1.7	1.9	amps
Peak R-F Grid Input Voltage	735	630	710	volts
Driving Power (Approx.)	1.3	0.95	1.35	kw
Grid Dissipation	480	350	590	watts
Plate Input	25.2	25.6	40	kw
Plate Dissipation	5.2	5.6	10	kw
Plate Power Output	20	20	30	kw

[1] A minimum flow of 400 cubic feet of air per minute must be passed through the plate cooler. The pressure drop across the cooler at this flow equals 1.5" of water. A minimum air flow of 200 cubic feet per minute must also be directed toward the filament end of the tube. The pressure required for filament-structure cooling is low, and depends upon the details of the tube mounting. Preference should be given to filament-structure cooling systems which allow air to enter or exhaust through the central hole in the lower filament strapping plate. Cooling air in the above amounts must be applied to both the plate cooler and filament assembly before applying filament voltage and should be continued for five minutes after the filament power is removed.

▶ Indicates change from sheet dated 2-25-47

(Effective 4-15-47) Copyright, 1947 by Eitel-McCullough, Inc.

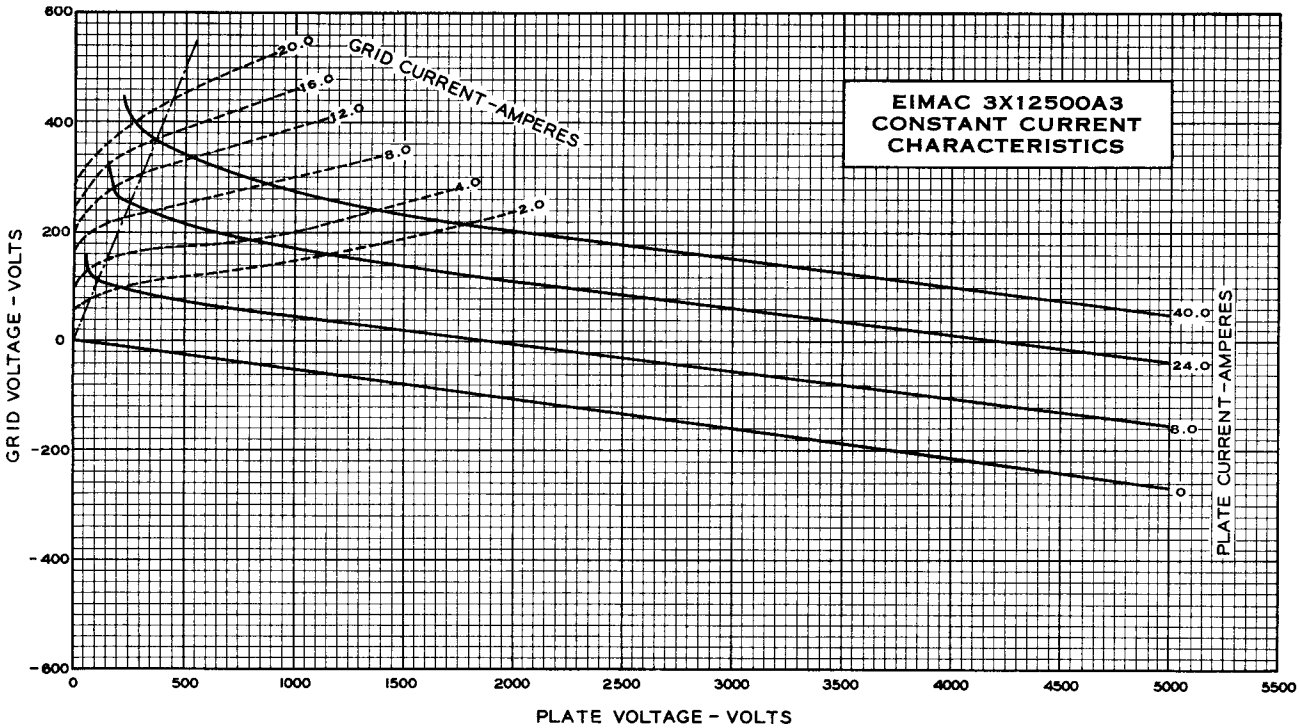

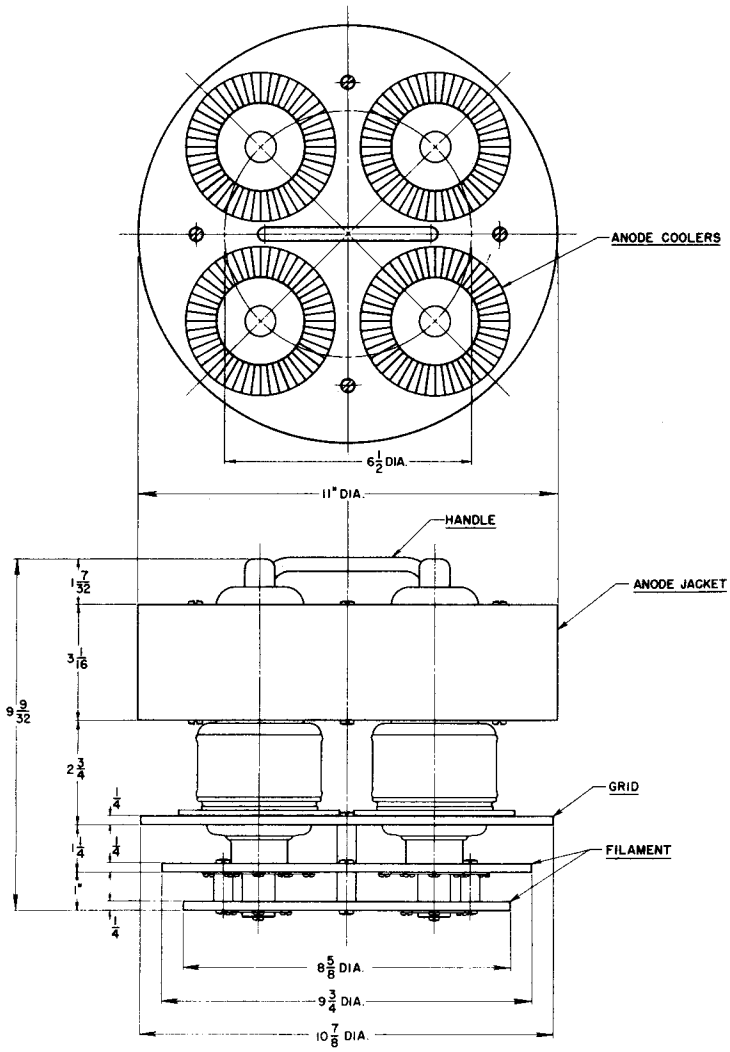

Printed in U.S.A. 2-X444-25402