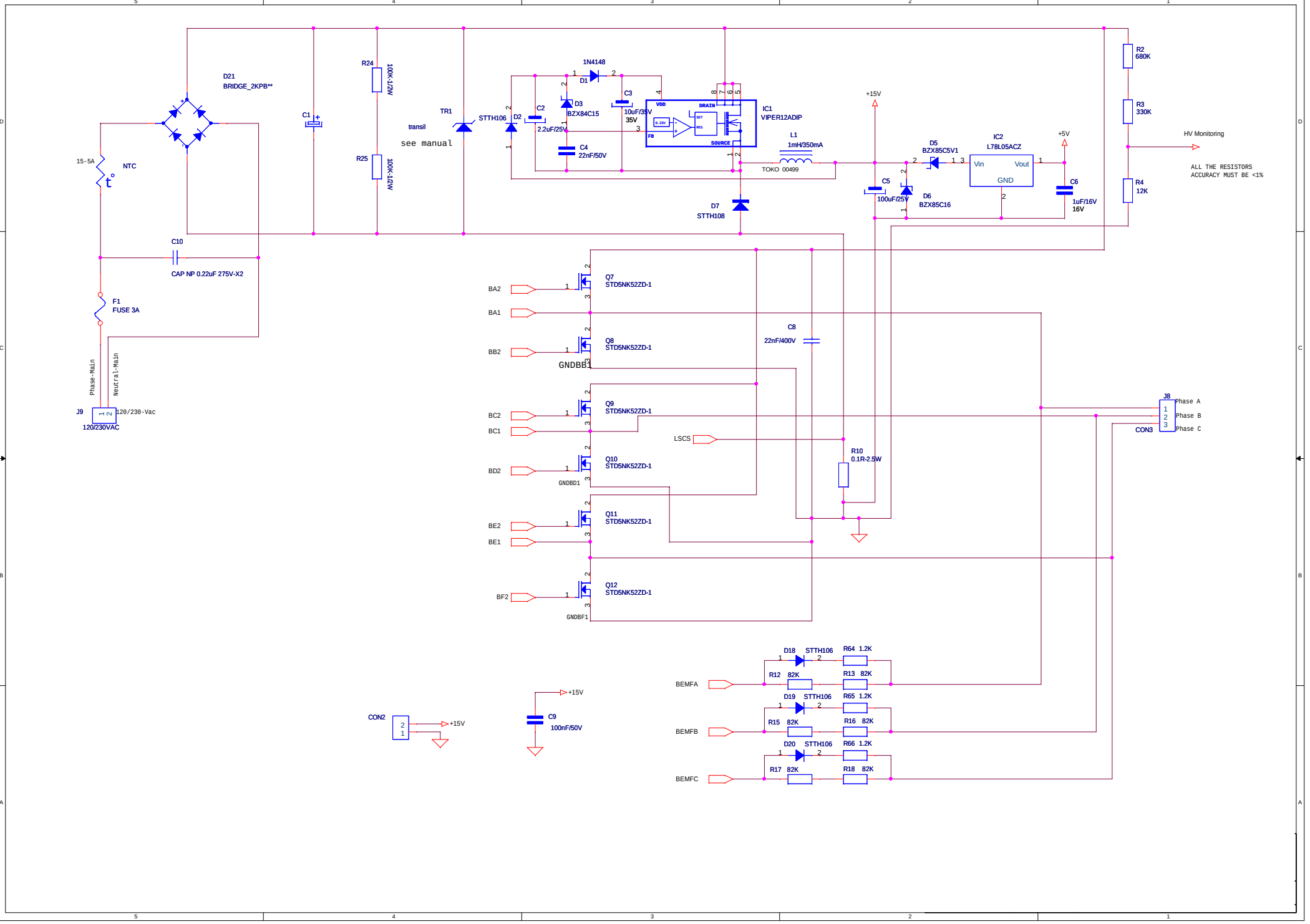
D21
BRIDGE_2KPB**
C1
R24
100K-1/2W
R25
100K-1/2W
TR1
transil
see manual
STTH106
D2
C2
2.2uF/25V
1N4148
D1
D3
BZX84C15
C3
10uF/35V
35V
C4
22nF/50V
IC1
VIPER12ADIP
VDD
DRAIN
FB
SOURCE
SET
RES
L1
1mH/350mA
TOKO 00499
D7
STTH108
+15V
C5
100uF/25V
D5
BZX85C5V1
D6
BZX85C16
IC2
L78L05ACZ
Vin
Vout
GND
+5V
C6
1uF/16V
16V
R2
680K
R3
330K
R4
12K
HV Monitoring
ALL THE RESISTORS
ACCURACY MUST BE <1%
15-5A
NTC
t°
C10
CAP NP 0.22uF 275V-X2
F1
FUSE 3A
Phase-Main
Neutral-Main
J9
120/230-Vac
120/230VAC
BA2
BA1
BB2
GNDBB1
Q7
STD5NK52ZD-1
Q8
STD5NK52ZD-1
C8
22nF/400V
BC2
BC1
Q9
STD5NK52ZD-1
LSCS
R10
0.1R-2.5W
BD2
GNDBD1
Q10
STD5NK52ZD-1
BE2
BE1
Q11
STD5NK52ZD-1
BF2
GNDBF1
Q12
STD5NK52ZD-1
J8
Phase A
Phase B
Phase C
CON3
D18
STTH106
R64 1.2K
R12 82K
R13 82K
BEMFA
D19
STTH106
R65 1.2K
R15 82K
R16 82K
BEMFB
D20
STTH106
R66 1.2K
R17 82K
R18 82K
BEMFC
CON2
+15V
C9
100nF/50V

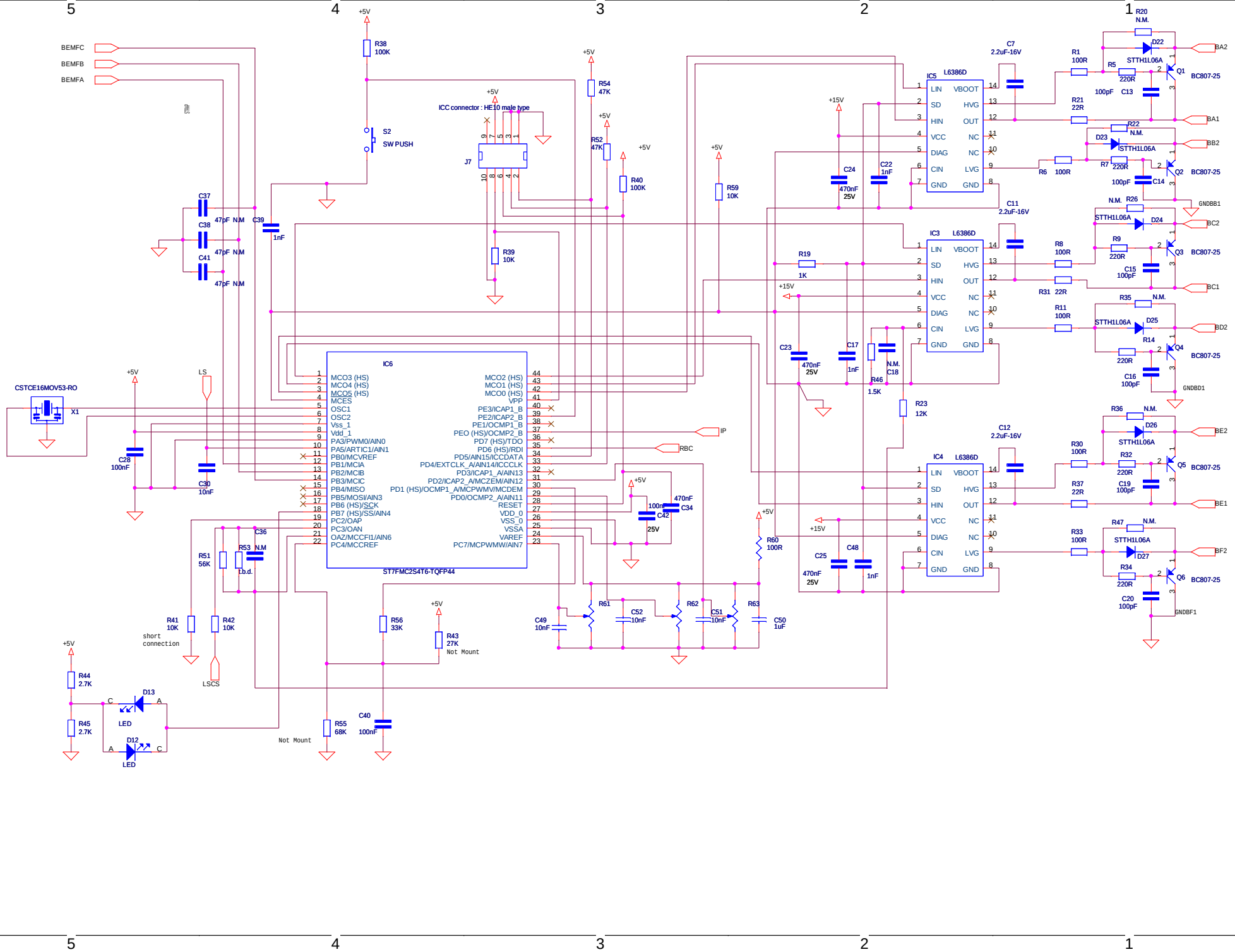
BEMFC
BEMFB
BEMFA
STRAP
R38 100K
S2 SW PUSH
ICC connector : HE10 male type
J7
R54 47K
R52 47K
R40 100K
R59 10K
R39 10K
C37 47pF N.M
C38 47pF N.M
C41 47pF N.M
C39 1nF
CSTCE16MOV53-RO
X1
C28 100nF
C30 10nF
LS
IC6
MCO3 (HS)
MCO4 (HS)
MCO5 (HS)
MCES
OSC1
OSC2
Vss_1
Vdd_1
PA3/PWM0/AIN0
PA5/ARTIC1/AIN1
PB0/MCVREF
PB1/MCIA
PB2/MCIB
PB3/MCIC
PB4/MISO
PB5/MOSI/AIN3
PB6 (HS)/SCK
PB7 (HS)/SS/AIN4
PC2/OAP
PC3/OAN
OAZ/MCCFI1/AIN6
PC4/MCCREF
MCO2 (HS)
MCO1 (HS)
MCO0 (HS)
VPP
PE3/ICAP1_B
PE2/ICAP2_B
PE1/OCMP1_B
PEO (HS)/OCMP2_B
PD7 (HS)/TDO
PD6 (HS)/RDI
PD5/AIN15/ICCDATA
PD4/EXTCLK_A/AIN14/ICCCLK
PD3/ICAP1_A/AIN13
PD2/ICAP2_A/MCZEM/AIN12
PD1 (HS)/OCMP1_A/MCPWMV/MCDEM
PD0/OCMP2_A/AIN11
RESET
VDD_0
VSS_0
VSSA
VAREF
PC7/MCPWMW/AIN7
ST7FMC2S4T6-TQFP44
IP
RBC
C36
R51 56K
R53 N.M
t.b.d.
R41 10K
R42 10K
short connection
LSCS
R44 2.7K
R45 2.7K
D13 LED
D12 LED
R55 68K
Not Mount
C40 100nF
R56 33K
R43 27K Not Mount
C34 470nF
C42 100nF 25V
R60 100R
C49 10nF
R61
C52 10nF
R62
C51 10nF
R63
C50 1uF
IC5 L6386D
IC3 L6386D
IC4 L6386D
LIN
SD
HIN
VCC
DIAG
CIN
GND
VBOOT
HVG
OUT
NC
LVG
C7 2.2uF-16V
C11 2.2uF-16V
C12 2.2uF-16V
C24 470nF 25V
C22 1nF
R19 1K
C23 470nF 25V
C17 1nF
R46 1.5K
N.M. C18
R23 12K
C25 470nF 25V
C48 1nF
R1 100R
R21 22R
R6 100R
R8 100R
R31 22R
R11 100R
R30 100R
R37 22R
R33 100R
R20 N.M.
D22 STTH1L06A
R5 220R
C13 100pF
Q1 BC807-25
R22 N.M.
D23 STTH1L06A
R7 220R
C14 100pF
Q2 BC807-25
R26 N.M.
D24 STTH1L06A
R9 220R
C15 100pF
Q3 BC807-25
R35 N.M.
D25 STTH1L06A
R14 220R
C16 100pF
Q4 BC807-25
R36 N.M.
D26 STTH1L06A
R32 220R
C19 100pF
Q5 BC807-25
R47 N.M.
D27 STTH1L06A
R34 220R
C20 100pF
Q6 BC807-25
BA2
BA1
BB2
GNDBB1
BC2
BC1
BD2
GNDBD1
BE2
BE1
BF2
GNDBF1