cynergy3 components™

SSF213

miniature internal fitting

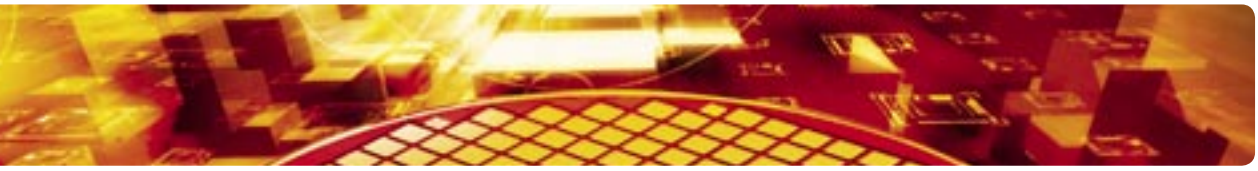

The SSF213 series is a miniature horizontally mounted switch that is mounted internally in the side of the tank, so requires access to the inside of the tank.

Total length inside tank for this type is 54.5 mm.

They are manufactured in 304 grade Stainless Steel, for those liquids and environments that require the use of Stainless Steel and will work in liquids of SG 0.8 minimum.

The switch action may be reversed by mounting the device with the float able to move upwards away from the body, instead of the normal downwards direction.

- ***Stainless steel***
- ***Internal mounting***
- ***Miniature design***
- ***Temperature range to 120°C***
- ***User configurable N/O or N/C action***

Technical Specification			
Mounting style	Internal	Cable length - standard	500mm
Mounting thread	1/8" BSP	Cable size	17/0.10 - AWG22
Float & Stem material	304 grade	Cable conductor material	Tinned copper
Maximum Temperature	120°C	Cable sheath material	XLPE
Maximum Pressure	5 bar	Cable temperature rating	125°C
Float SG	0.7	Sealing gasket	Not supplied
Minimum fluid SG	0.8	Tightening torque for fixing nut	2.0kg/cm

Electrical Specification	
Contact Form	N/O
Switching Power Max. VA	1
Switching Current Max. A	0.1
Switching Voltage AC	24
Switching Voltage DC	24

All ratings are for resistive load only.

Standard Parts	Leadouts
SSF213T050	50cm XLPE wires

USA
Cynergy3 Components
2320 Paseo de las Americas, Suite 104
San Diego, CA 92154
Sales & Tech Support (866) 258-5057
Email: sales@cynergy3.com

EUROPE - UK
Cynergy3 Components Ltd.
7 Cobham Road
Ferndown Industrial Estate
Wimborne, Dorset BH21 7PE
Telephone +44 (0) 1202 897969
Fax +44 (0) 1202 891918
Email:sales@cynergy3.com

Mechanical Dimensions

All dimensions are in millimeters (inches)

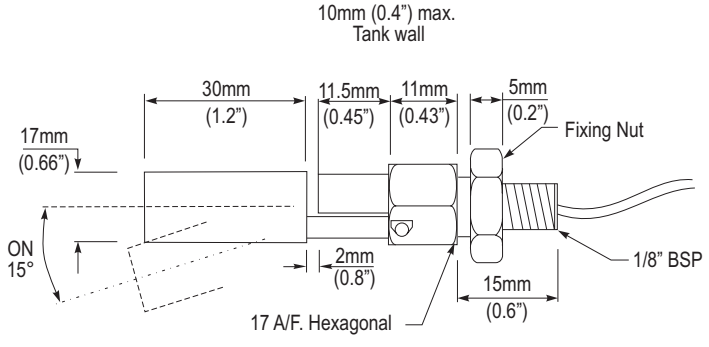

ISO9001 CERTIFIED

Competitive part number cross-reference available at: www.cynergy3.com

© 2007 Cynergy3 Components, All Rights Reserved. Specifications are subject to change without prior notice. Cynergy3 Components and the Cynergy3 Components logo are trademarks of Cynergy3 Components Corp.