General purpose (dual digital transistors)

UMG1N / UMH1N / UMH5N / FMG1A / IMH1A / IMH5A

●Features

1) Two DTA124E chips in a UMT or SMT package.

●Absolute maximum ratings (Ta = 25°C)

Parameter		Symbol	Limits	Unit
Supply voltage		V_{CC}	50	V
Input voltage		V_{IN}	40	V
			−10	
Output current		I_O	30	mA
Power dissipation	UMG1N, UMH1N, UMH5N	Pd	150(TOTAL)	mW *1
	FMG1A, IMH1A, IMH5A		300(TOTAL)	*2
Junction temperature		Tj	150	°C
Storage temperature		Tstg	−55 ~ +150	°C

*1 120mW per element must not be exceeded.
*2 200mW per element must not be exceeded.

●Package, marking, and packaging specifications

Part No.	UMG1N	UMH1N	UMH5N	FMG1A	IMH1A	IMH5A
Package	UMT5	UMT6	UMT6	SMT5	SMT6	SMT6
Marking	G1	H1	H5	G1	H1	H5
Code	TR	TN	TR	T148	T110	T110
Basic ordering unit (pieces)	3000	3000	3000	3000	3000	3000

●Circuit schematic

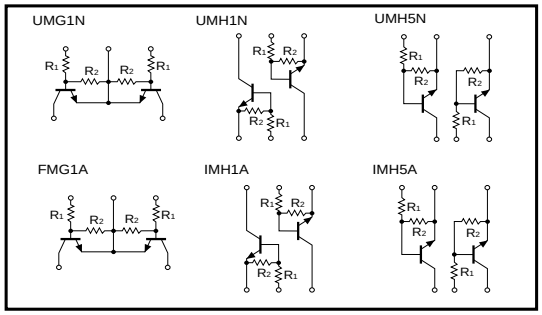

●External dimensions (Units : mm)

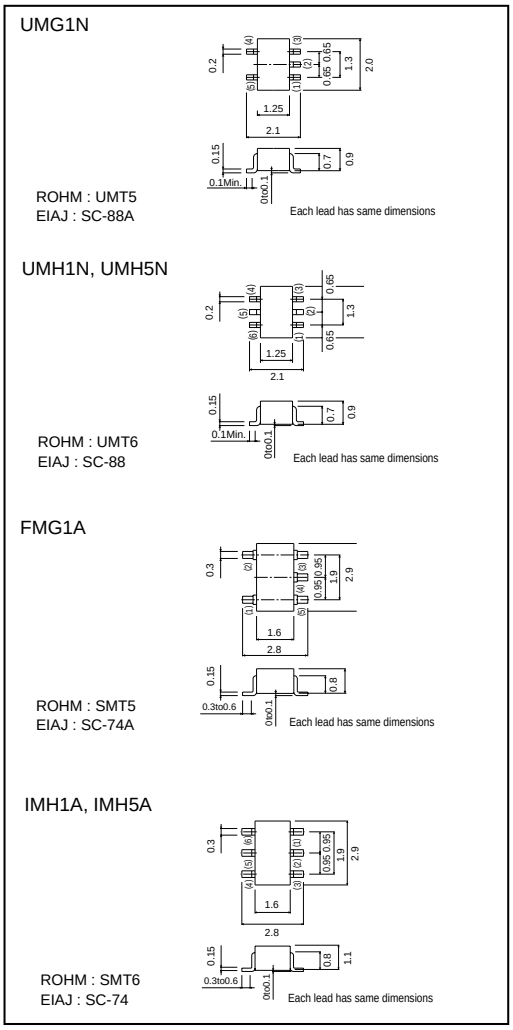

●Electrical characteristics (Ta = 25°C)

Parameter	Symbol	Min.	Typ.	Max.	Unit	Conditions
Input voltage	$V_{I(off)}$	–	–	0.5	V	V_{CC} = 5V , I_O = 100μA
	$V_{I(on)}$	3	–	–		V_O = 0.2V , I_O = 5mA
Output voltage	$V_{O(on)}$	–	0.1	0.3	V	I_O = 10mA ,I_I = 0.5mA
Input current	I_I	–	–	0.36	mA	V_I = 5V
Output current	$I_{O(off)}$	–	–	0.5	μA	V_{CC} = 50V , V_I = 0V
DC current gain	G_I	56	–	–	–	V_O = 5V , I_O = 5mA
Input resistance	R_1	15.4	22	28.6	kΩ	–
Resistance ratio	R_2/R_1	0.8	1	1.2	–	–