IC INFORMATION
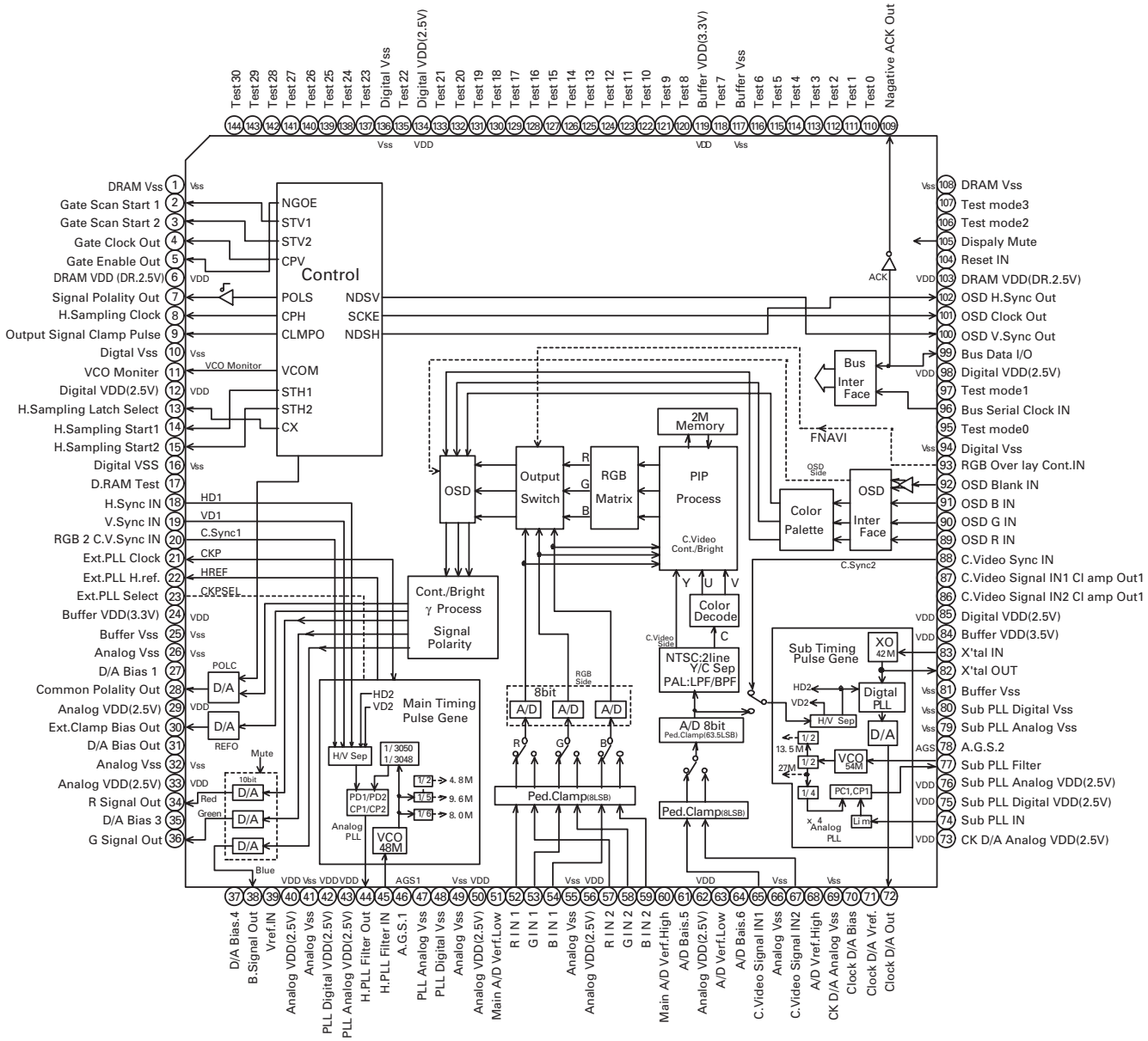
Function	Two pictures control	TC90A64AF	1/1	J E
Type	CMOS	Model	AVH-P6400CD/UC