IC INFORMATION

Function	CDEC	STA-400 1/1	J E
Type	CMOS	Model	GEX-FM903XM/UC

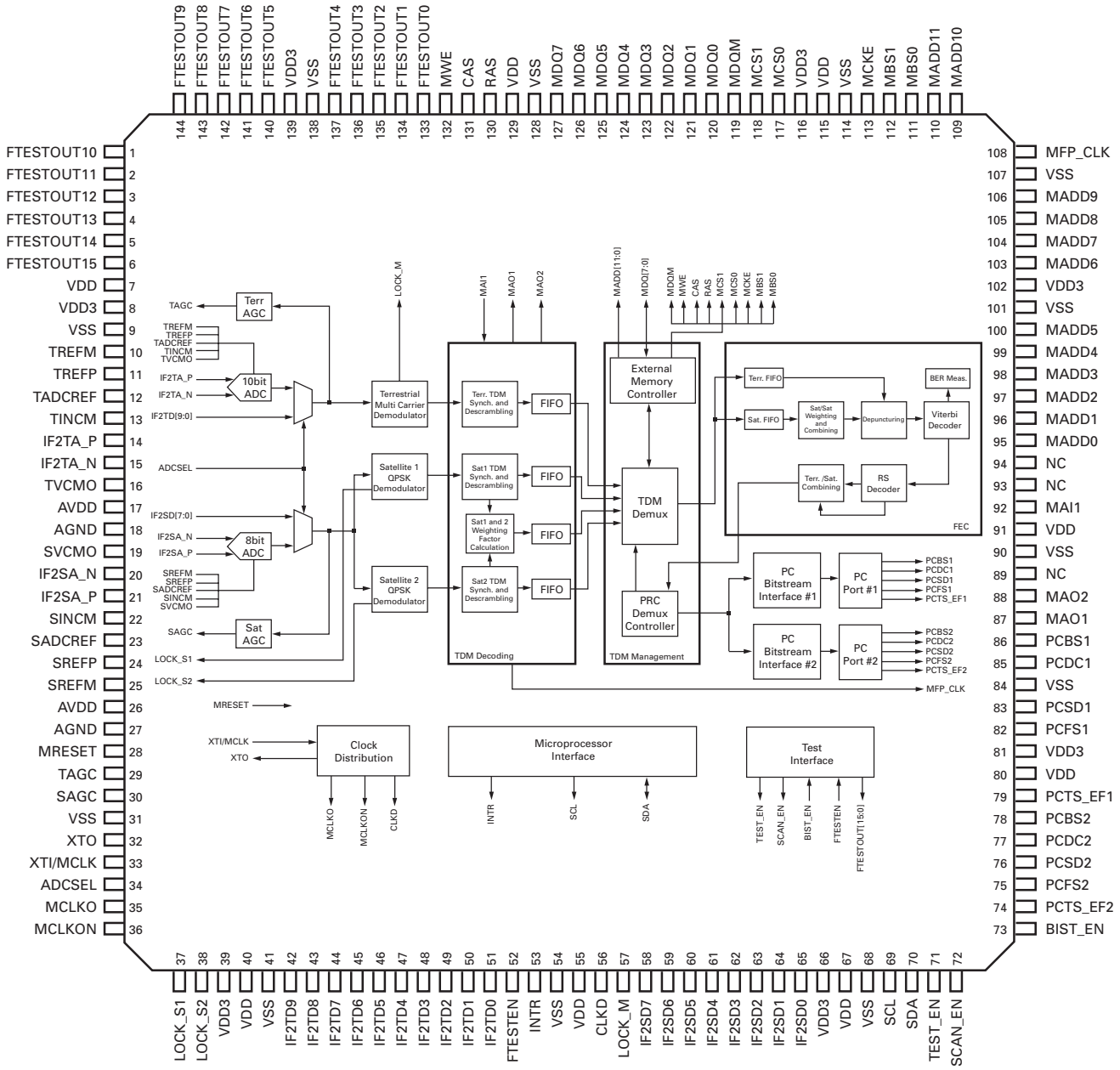

Pioneer

2001.8