IC INFORMATION
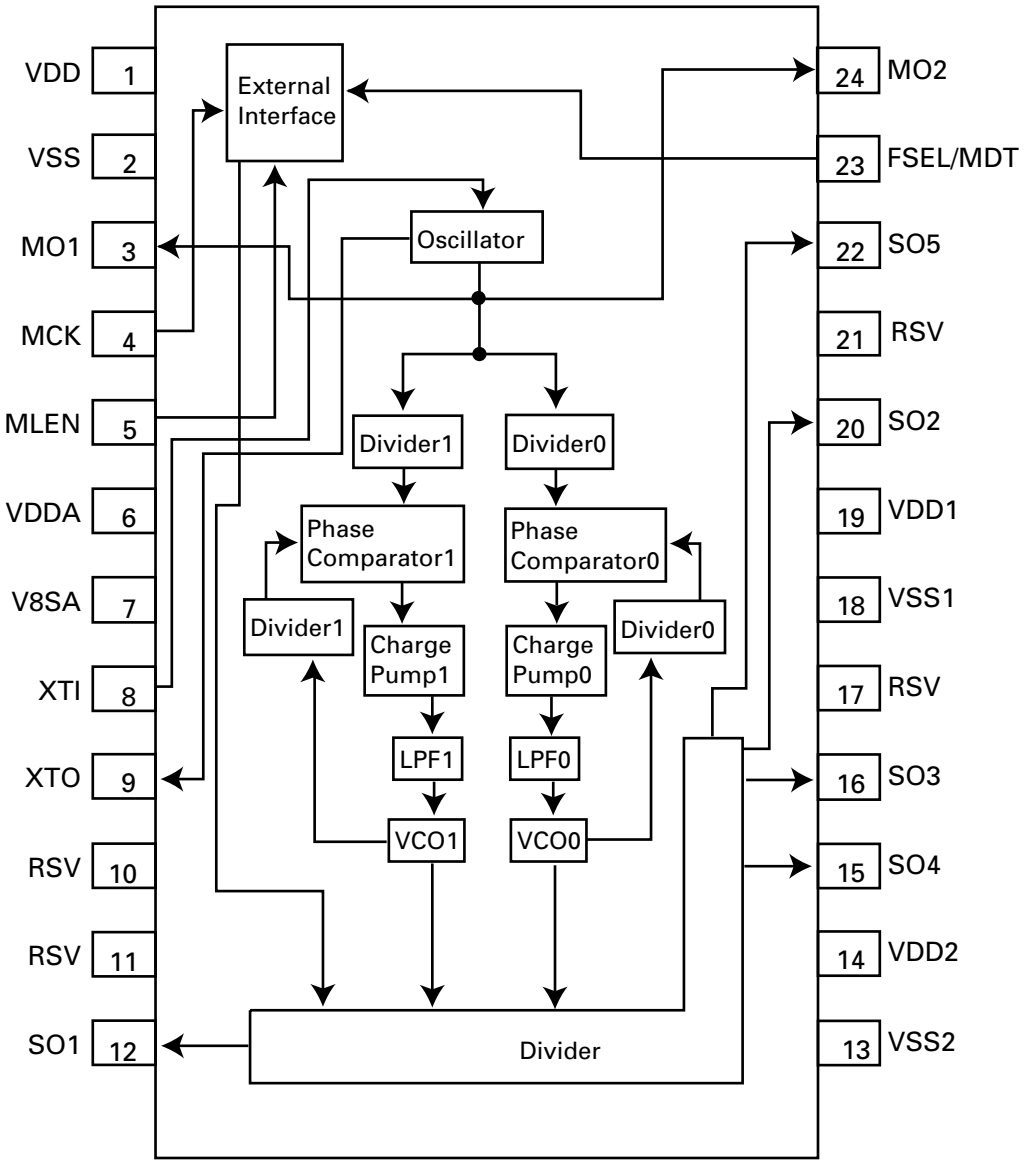
Function	Clock Generator	**SM8703AV**	1/1	J E
Type	CMOS	Model	AVIC-XD8067ZT