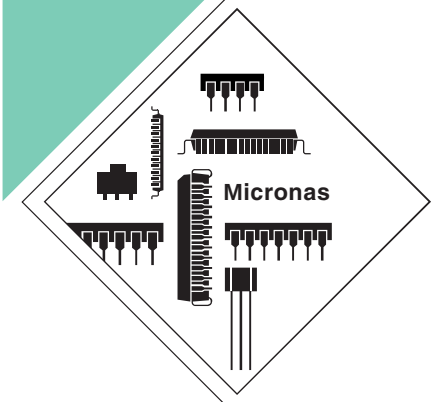

APPLICATION NOTE KITS/BOARDS

SDA 55xx
TVText Pro
Evaluation Board

Edition Oct. 9, 2001
6251-556-1AK

MICRONAS

Contents

Page	Section	Title
1	**1.**	**Introduction**
1	1.1.	Features of the TVText Pro Evaluation Board
2	**2.**	**Getting Started**
2	2.1.	Jumper Settings
2	2.2.	How to Start the Demonstration
3	**3.**	**Application Circuit**
6	**4.**	**Application Note History**

1. Introduction

The TVText Pro Evaluation Board is a versatile tool which provides quick access to the capabilities of TVText Pro's powerful architecture.

To enable applications to be developed quickly and easily, the TVText Pro Evaluation Board is fitted with a variety of peripherals for connections to the outside world. This document applies to version 2 or higher of the TVText Pro Evaluation Board. Version 2 can clearly be seen on the board by the marking B004-**V002**.

1.1. Features of the TVText Pro Evaluation Board

CPU:

– TVText Pro in open top socket (MQFP100 package)

Memory:

– FLASH/EPROM memory up to 512 k x 8 (3.3 V, PLCC32 package)

– SRAM 512 k x 8 (3.3 V, SO32 package)

– NV-Memory (3.3 V, DIP8 package, I^2C controlled)

Clock:

– 6 MHz crystal

Interfaces:

– Serial interface for RS232 (RS232 connector, DB9 plug)

– TV interface for display (SCART connector, SCART plug)

– Signal interface for Full Data Service Slicer (CVBS Input, BNC plug)

– Multifunctional interface for extension (Universal Con., 96-pin plug)

Power:

– Only one external stable +5 V power supply unit required

– On-board generated +3.3 V (adjustable), +2.5 V (adj.) and +8.0 V

Modules:

– Infrared receiver for IR remote control

– Sync-Separator for generating H- and V-sync from an CVBS signal

Dimensions:

– 100 mm x 154 mm, height: 3.1 mm

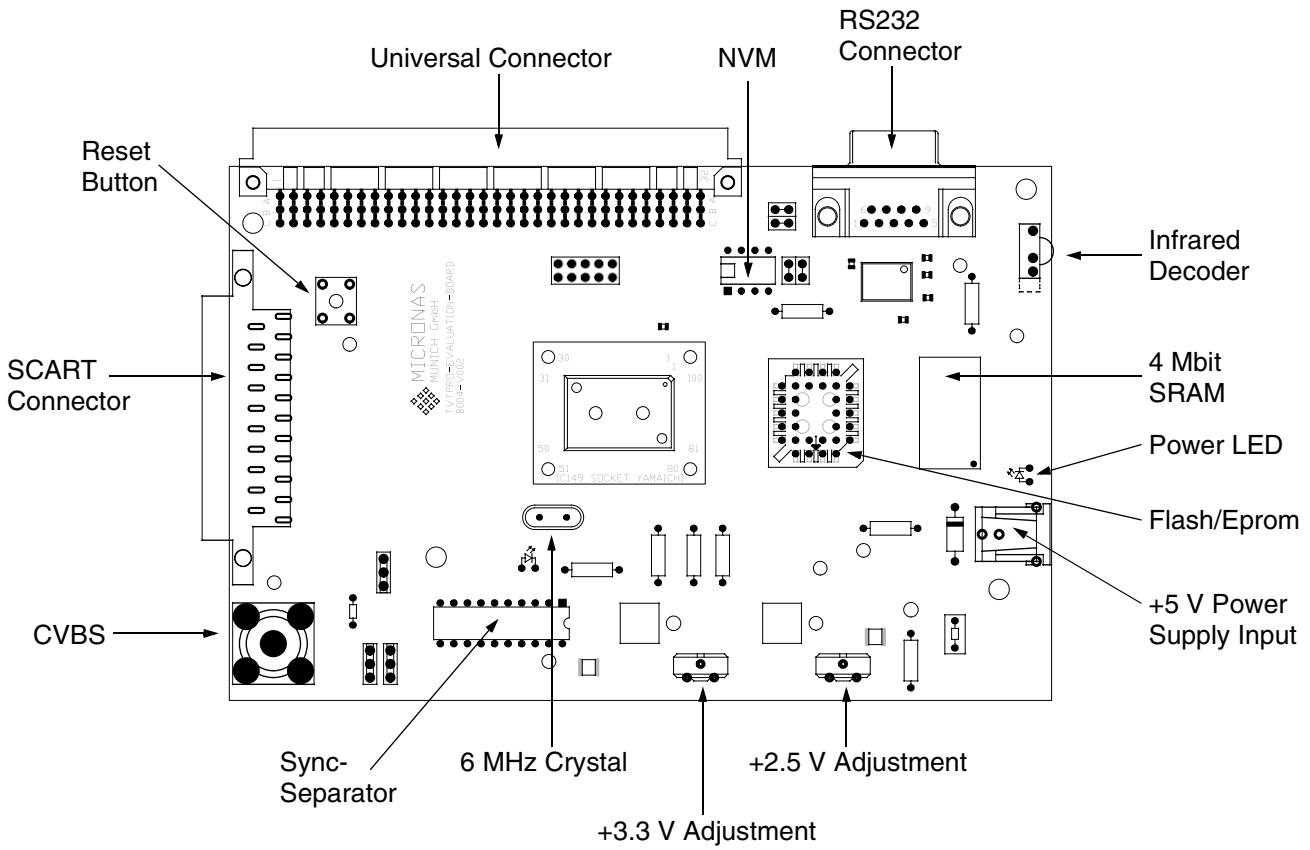

Fig. 1–1: TVText Pro Evaluation Board

2. Getting Started

2.1. Jumper Settings

An overview of all jumpers and switches of the TVText Pro Evaluation Board is shown in Table 2–1. The setting recommended in the last column “Setting” is used for running the demonstration software (P090Vxxx : 10 pages or P098Vxxx: 252 pages) with a television connected via the SCART connector.

2.2. How to Start the Demonstration

After setting the jumpers to the right position, proceed through the following instructions to start the demonstration software:

– connect an antenna to a TV set and tune the TV (video picture on screen)

– connect the TV set via a SCART cable to the TVText Pro Evaluation Board

– connect a stable +5 V power supply unit (300 mA) to the power supply input ('POWER 5 V') of the TVText Pro Evaluation Board

– press the reset button on the TVText Pro Evaluation Board

– if the TVText Pro does not synchronize its OSD to the video, switch the TV set to AV mode.

Table 2–1: Overview: jumpers and switches

Jumper	Description	Setting
SW100	Selection of sync source for the HS/SC input pin: Sandcastle (‘SSC’) or H-sync (‘HSYNC’)	Position SSC
SW101 (SYNC)	Selection of CVBS source for the sync separator: ‘BNC’ connector or ‘SCART’ connector	Position SCART
SW102 (SLICER)	Selection of CVBS source for TVText Pro’s slicer: ‘BNC’ connector or ‘SCART’ connector	Position SCART
J200 (RxD)	Connect RS232-Interface Driver (RxD0) to TVText Pro	don’t care
J201 (TxD)	Connect RS232-Interface Driver (TxD0) to TVText Pro	don’t care
J300 (SDA)	Connect P3.4/SDA to NV-Memory	don’t care
J301 (SCL)	Connect P3.2/SCL to NV-Memory	don’t care

3. Application Circuit

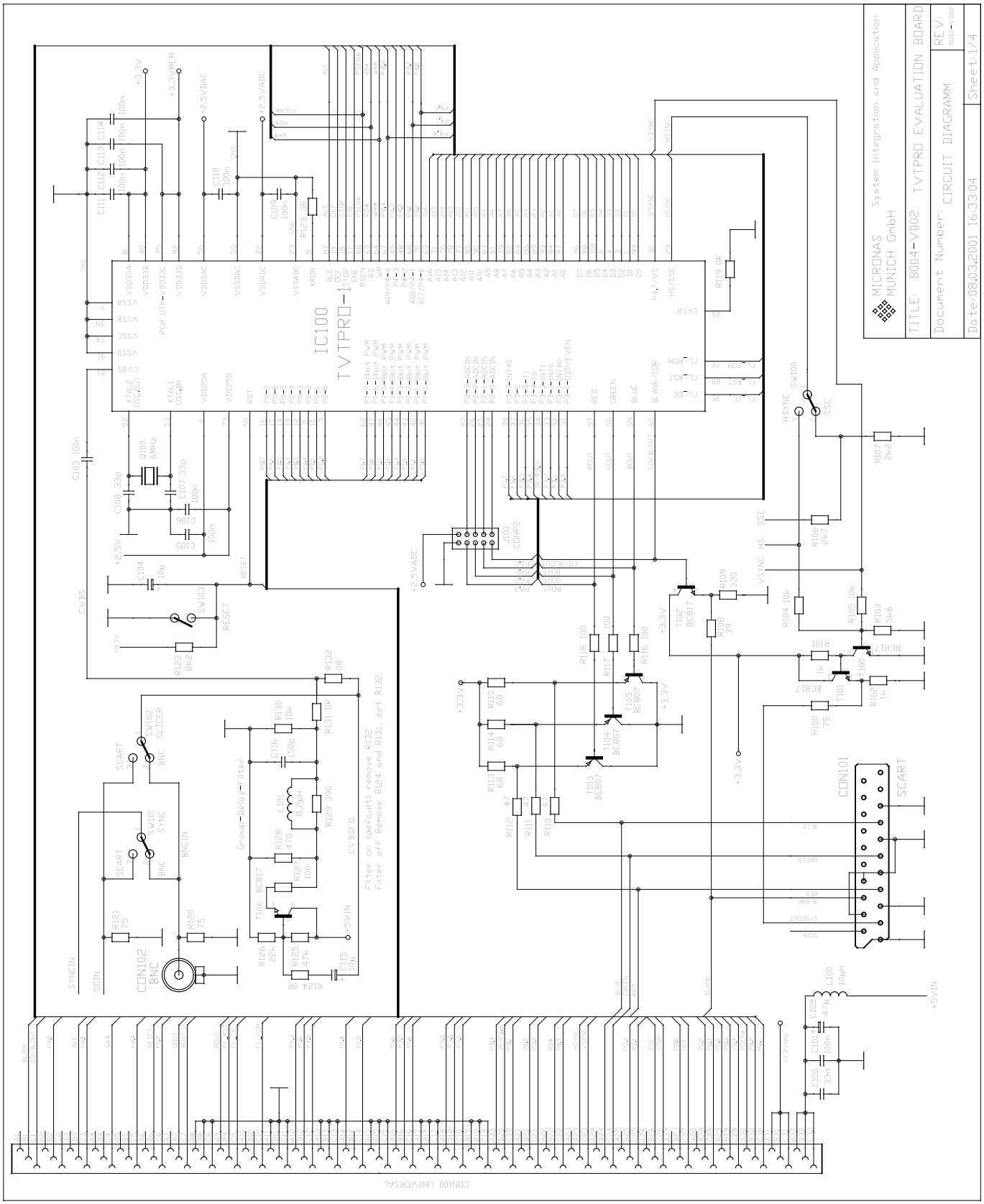

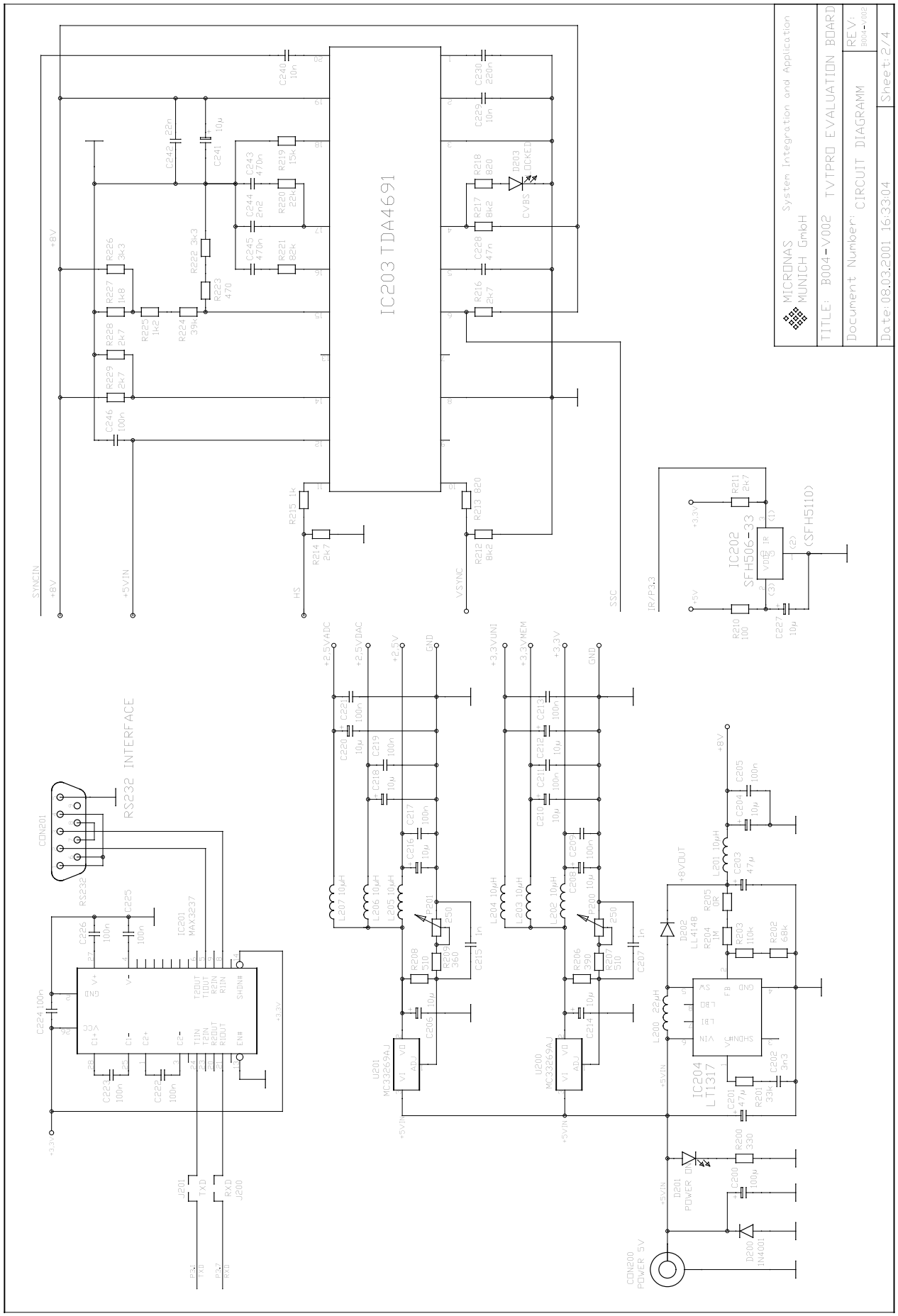
MICRONAS
MUNICH GmbH
System Integration and Application
TITLE: B004-V002 TVTPRO EVALUATION BOARD
Document Number: CIRCUIT DIAGRAMM
REV: B004-V002
Date: 08.03.2001 16:33:04
Sheet: 2/4
IC203 TDA4691
IC202 SFH506-33
(SFH5110)
IC204 LT1317
IC201 MAX3237
RS232 INTERFACE
CON201
CON200 POWER 5V
U201 MC33269AJ
U200 MC33269AJ
D201 POWER ON
D200 1N4001
D202 LL4148
D203 LOCKED
SYNCIN
+8V
+5VIN
HS
VSYNC
SSC
IR/P3.3
+2.5VADC
+2.5VDAC
+2.5V
GND
+3.3VUNI
+3.3VMEM
+3.3V
+8VOUT
J201 TXD
J200 RXD

4. Application Note History

1. Application Note Kits/Boards: “SDA 55xx TVText Pro Evaluation Board”, Oct. 9, 2001, 6251-556-1AK. First release of the application note kits/boards.

Micronas GmbH
Hans-Bunte-Strasse 19
D-79108 Freiburg (Germany)
P.O. Box 840
D-79008 Freiburg (Germany)
Tel. +49-761-517-0
Fax +49-761-517-2174
E-mail: docservice@micronas.com
Internet: www.micronas.com

Printed in Germany
Order No. 6251-556-1AK

All information and data contained in this data sheet are without any commitment, are not to be considered as an offer for conclusion of a contract, nor shall they be construed as to create any liability. Any new issue of this data sheet invalidates previous issues. Product availability and delivery are exclusively subject to our respective order confirmation form; the same applies to orders based on development samples delivered. By this publication, Micronas GmbH does not assume responsibility for patent infringements or other rights of third parties which may result from its use.
Further, Micronas GmbH reserves the right to revise this publication and to make changes to its content, at any time, without obligation to notify any person or entity of such revisions or changes.
No part of this publication may be reproduced, photocopied, stored on a retrieval system, or transmitted without the express written consent of Micronas GmbH.