IC INFORMATION

Function	Main CPU SRAM	M5M5V216ATP-55HI 1/1		J E
Type	CMOS	Model	AVIC-XD8067ZT	

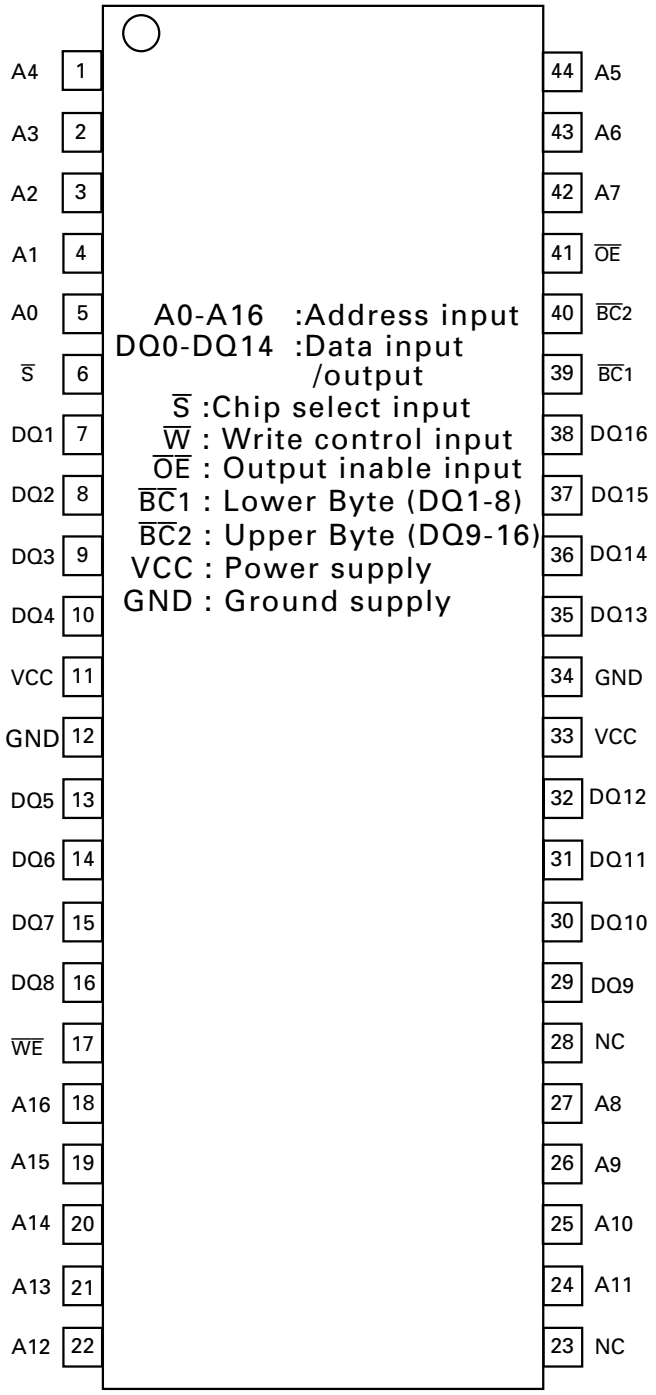

Pioneer

2001.4