SYNCHRONIZATION/DEFLECTION CIRCUIT

– TOP VIEW –

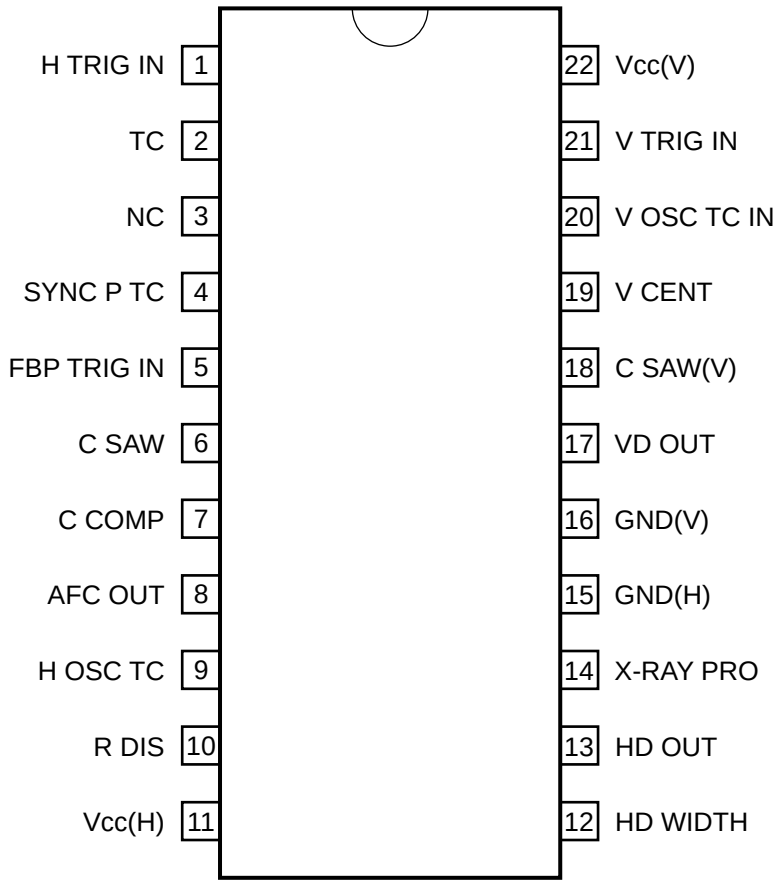
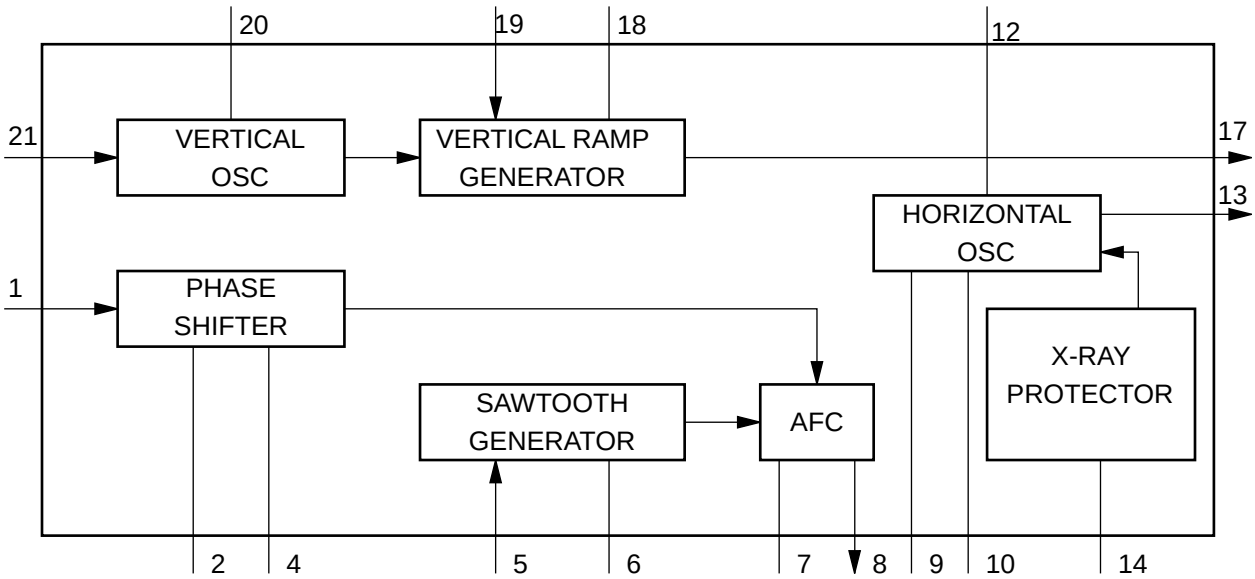
Vcc(H): +9V to +13.5V
Vcc(V): +9V to +13.5V