IC INFORMATION

Function	SRAM	IS61C1024L-15TI	1/1	J / E
Type	CMOS	Model	DEQ-P7000/UC	

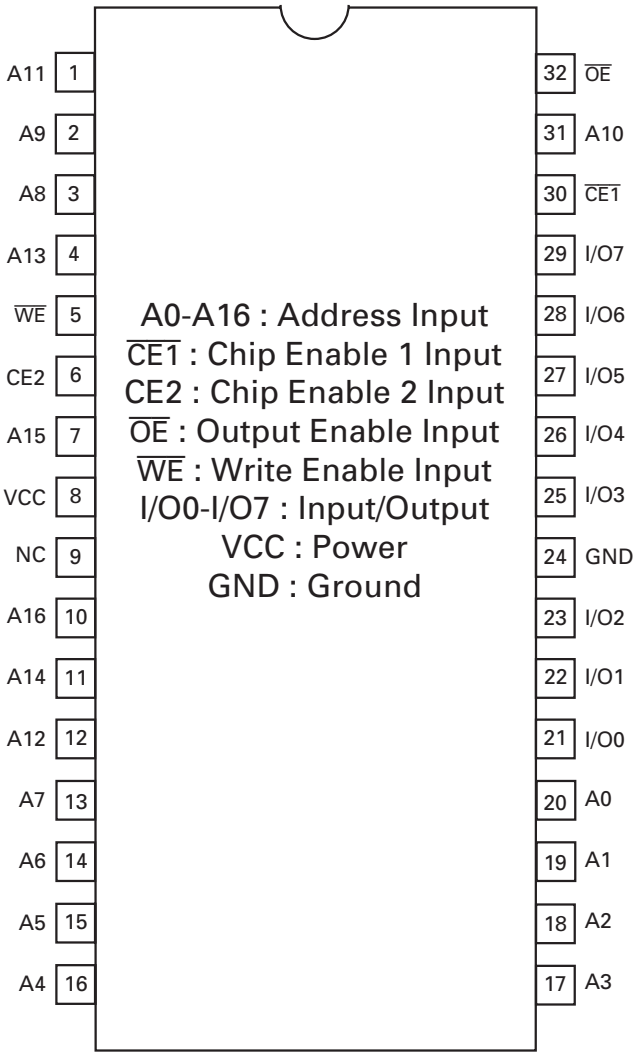

Pioneer

2002.3