Built-in BBEII Audio sound controller

BD3860K

BD3860K can reproduce clear sound in high band and distinct sound in low band by integrating BBEII function.
If this IC is used for car stereo, sound can be reproduced distinctly without turning up the volume.

●Applications

Car audio, Mini component, Micro component.

●Features

1) Built-in BBEII circuit, 4-input selector (4ch stereo), input gain, main volume, loudness, tone (2 band), fader volume.
2) BBEII circuit is profitable for S/N because of no process control in no signal.
3) Bi-CMOS process is suitable for the design of low current and energy saving. It provides more quality for small scale regulator and heat in a set.
4) Q factor, center frequency f_0, and gain G of bass can be controlled by external parts. These functions can be used as super bass filter.
5) Can be controlled by power supply of 3.3V or 5V.
6) Easy to design signal level diagram by laying BBEII, and tone circuit through main volume.
7) Easy layout of the board by laying each pin of audio input (total 8pin), and audio output (total 4pin) together.

●Absolute maximum ratings (Ta=25°C)

Parameter	Symbol	Limits	Unit
Power supply voltage	V_{CC}	10	V
Power dissipation	Pd	850*	mW
Operating temperature	Topr	–40~+85	°C
Storage temperature	Tstg	–55~+125	°C

*Reduced by 8.5mW for each increase in Ta of 1°C over 25°C.

●Recommended operating conditions (Ta=25°C)

Parameter	Symbol	Min.	Typ.	Max.	Unit
Power supply voltage	V_{CC}	7.0	–	9.5	V

●**Block diagram**

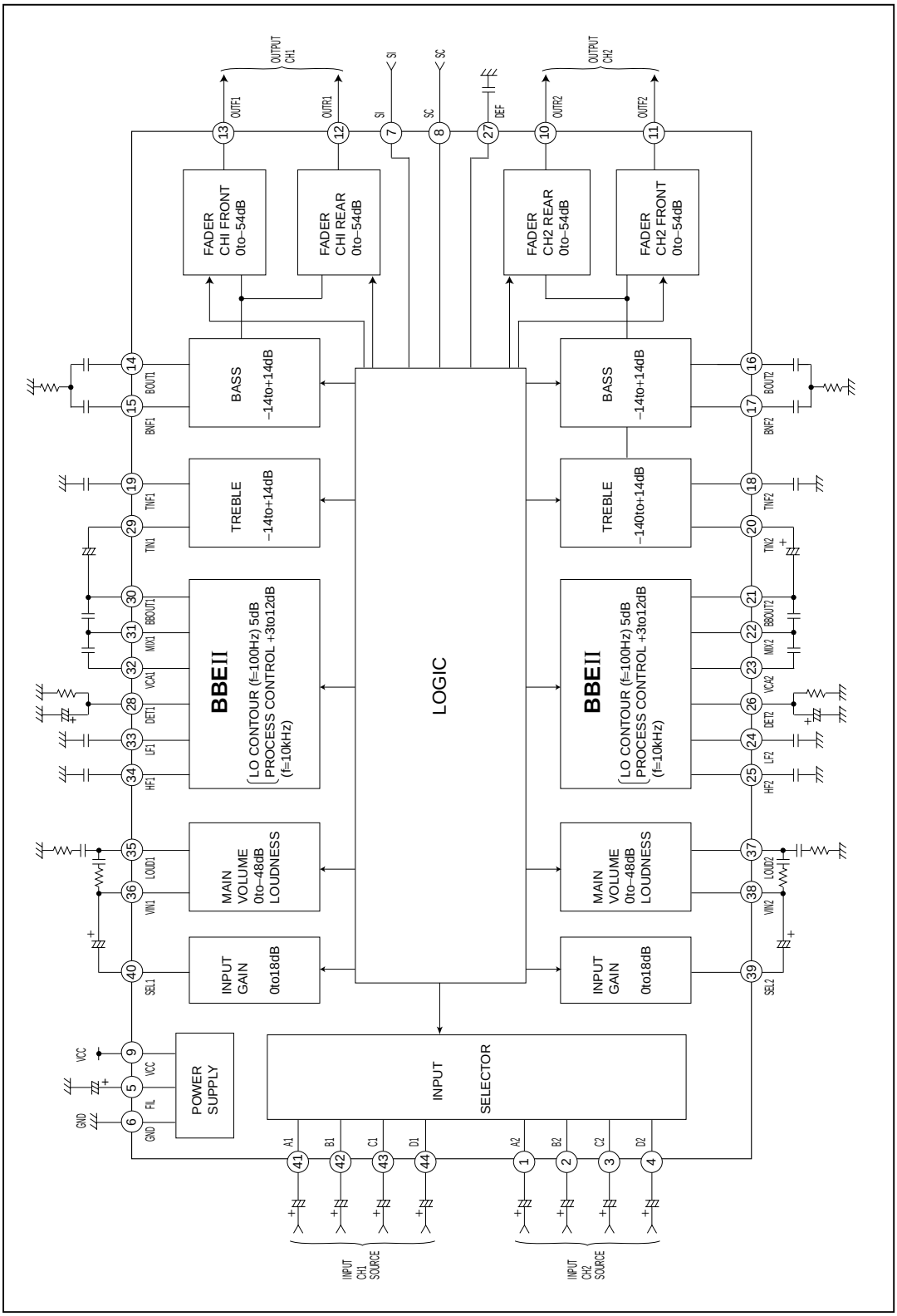

●Pin descriptions

Pin No.	Pin name	Function	Pin No.	Pin name	Function
1	A2	CH2 input pin A	23	VCA2	CH2 high pass VCA output pin
2	B2	CH2 input pin B	24	LF2	CH2 Low pass filter setting pin
3	C2	CH2 input pin C	25	HF2	CH2 high pass filter setting pin
4	D2	CH2 input pin D	26	DET2	CH2 high pass attack / release time setting pin
5	FIL	1/2 VCC pin	27	DEF	BBE II ON/OFF switching time constant pin
6	GND	Ground pin	28	DET1	CH1 high pass attack / release time setting pin
7	SI	Serial data receiving pin	29	TIN1	CH1 Treble input pin
8	SC	Serial clock receiving pin	30	BBOUT1	CH1 BBE II signal output pin
9	VCC	Power supply pin	31	MIX1	CH1 output MIX amplifier inverse input pin
10	OUTR2	CH2 Rear output pin	32	VCA1	CH1 high pass VCA output pin
11	OUTF2	CH2 Front output pin	33	LF1	CH1 low pass filter setting pin
12	OUTR1	CH1 Rear output pin	34	HF1	CH1 high pass filter setting pin
13	OUTF1	CH1 Front output pin	35	LOUD1	CH1 Loudness filter setting pin
14	BOUT1	CH1 Bass filter setting pin	36	VIN1	CH1 main volume input pin
15	BNF1	CH1 Bass filter setting pin	37	LOUD2	CH2 Loudness filter setting pin
16	BOUT2	CH2 Bass filter setting pin	38	VIN2	CH2 main volume input pin
17	BNF2	CH2 Bass filter setting pin	39	SEL2	CH2 input gain output pin
18	TNF2	CH2 Treble filter setting pin	40	SEL1	CH1 input gain output pin
19	TNF1	CH1 Treble filter setting pin	41	A1	CH1 input pin A
20	TIN2	CH2 Treble input pin	42	B1	CH1 input pin B
21	BBOUT2	CH2 BBE II signal output pin	43	C1	CH1 input pin C
22	MIX2	CH2 output MIX amplifier inverse input pin	44	D1	CH1 input pin D

●Pin equivalent circuit and description

Pin No.	Pin name	Pin voltage	Equivalent circuit	Pin description
41 42 43 44 1 2 3 4	A1 B1 C1 D1 A2 B2 C2 D2	4.5V	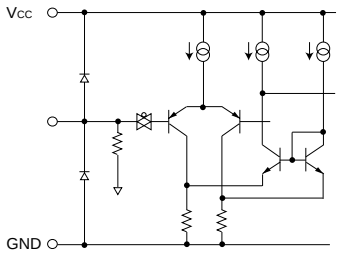	A pin for inputting a sound signal. It is suitable for input of CD, MD, tuner and tape. Connect this pin to a front stage circuit through a coupling capacitor.
40 39	SEL1 SEL2	4.5V	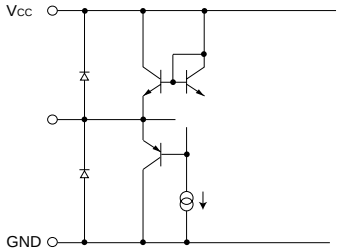	A pin for outputting a sound signal, which has been selected by an input selector and amplified by input gain. Connect this pin to a rear stage circuit through a coupling capacitor between the VIN1 and VIN2 pins.
36 38	VIN1 VIN2	4.5V	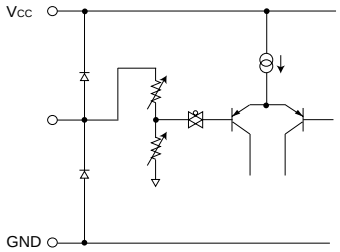	A pin for inputting a sound signal to main volume. The input impedance is 60kΩ (upon typical setting). Connect this pin to a front stage circuit through a coupling capacitor between the SEL1 and SEL2 pins circuit.
35 37	LOUD1 LOUD2	4.5V	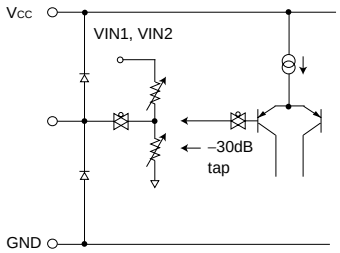	A pin for setting the loudness frequency characteristics and gain.

Pin No.	Pin name	Pin voltage	Equivalent circuit	Pin description
33 24	LF1 LF2	4.5V	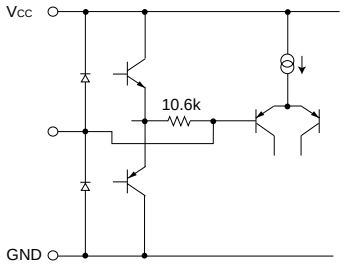	A pin for setting the low pass frequency of BBE II.
34 25	HF1 HF2	4.5V	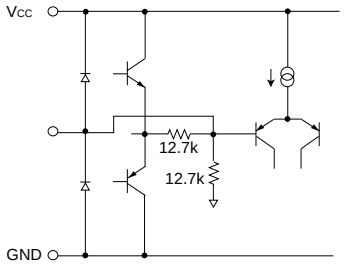	A pin for setting the high pass frequency of BBE II.
32 23	VCA1 VCA2	4.5V	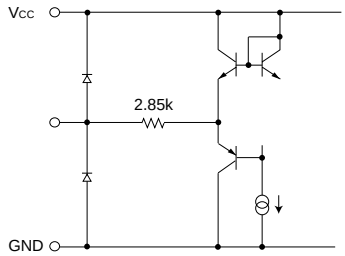	A pin for outputting the high pass VCA of BBE II. Connect the HPF capacitor between the MIX1 and MIX2 pins
31 22	MIX1 MIX2	4.5V	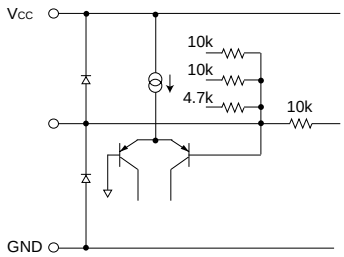	A pin for inverse input for output MIX amplifier of BBE II. Connect the HPF capacitor between the VCA1 and VCA2 pins, and the LPF capacitor between the BBOUT1 and BBOUT2 pins.

Pin No.	Pin name	Pin voltage	Equivalent circuit	Pin description
30 21	BBOUT1 BBOUT2	4.5V	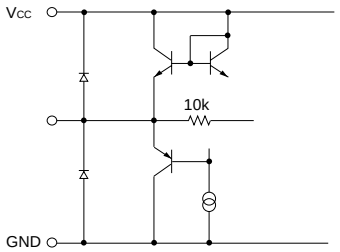	A pin for outputting the BBE II signal. Connect the LPF capacitor between the MIX1 and MIX2 pins and connect this pin to a rear stage circuit through a coupling capacitor between the TIN1 and TIN2 pins.
29 20	TIN1 TIN2	4.5V	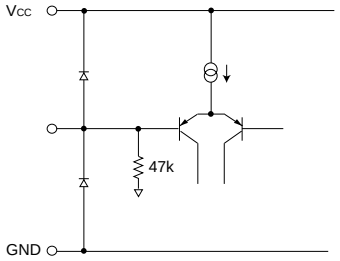	A pin for inputting a sound signal to Treble. The input impedance is 47kΩ (upon typical setting). Connect this pin to a front circuit through a coupling capacitor between the BBOUT1 and BBOUT2 pins.
28 26	DET1 DET2	–	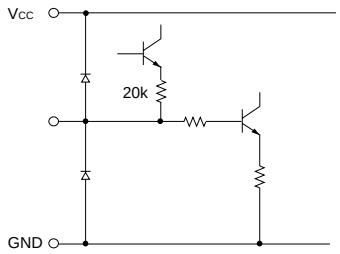	A pin for time constant of high pass boost detector of BBE II . Attack/Recovery time depends on the external capacitor and resistance.
27	DEF	–	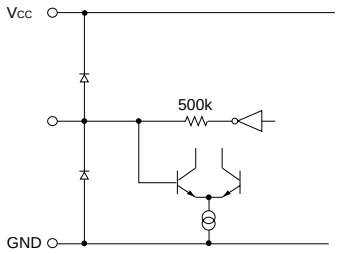	A pin for ON/OFF switching time constant of BBE II . Timing constant "T" depends on the external capacitor "C" and internal resistance "R" (upon typical setting). T=CR (sec)

Pin No.	Pin name	Pin voltage	Equivalent circuit	Pin description
19 18	TNF1 TNF2	4.5V	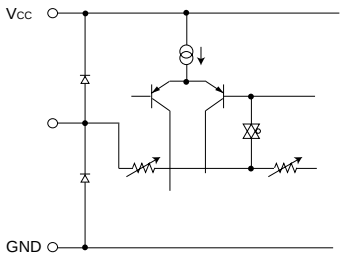	A pin for setting Treble frequency characteristic.
15 17	BNF1 BNF2	4.5V	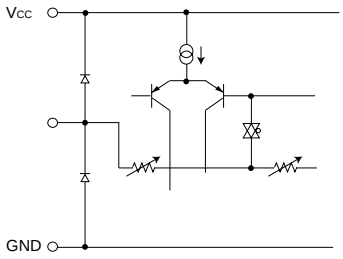	A pin for setting Bass frequency characteristic and gain.
14 16	BOUT1 BOUT2	4.5V	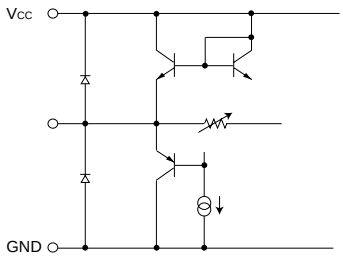	A pin for setting Bass frequency and gain.
13 12 11 10	OUTF1 OUTR1 OUTF2 OUTR2	4.5V	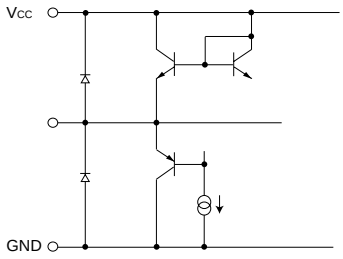	A pin for outputting a sound signal. Connect this pin to a rear stage circut through a coupling capacitor.

Pin No.	Pin name	Pin voltage	Equivalent circuit	Pin description
8	SC	–	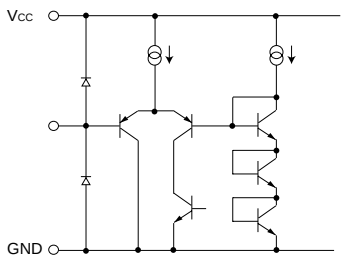	A pin for inputting a serial data.
7	SI	–	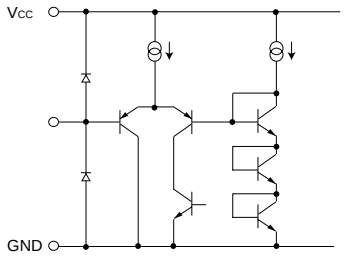	A pin for inputting a serial clock.
5	FIL	4.5V	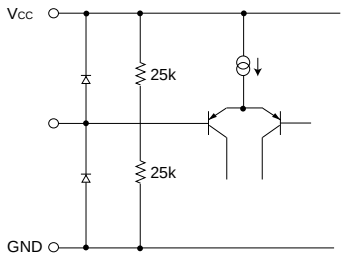	1/2 VCC. Voltage for power supply of signal system.
9	VCC	9V	–	Power supply pin.
6	GND	0V	–	A ground pin.

●Electrical characteristics

(Unless specified particularly, Ta=25°C, Vcc=9V, f=1kHz, RL=10kΩ, input gain 0dB, main volume 0dB, BBEII off, tone 0dB, fader volume 0dB, and the signal is inputted from A1 pin, and outputted to OUTF1 pin.)

Parameter	Symbol	Min.	Typ.	Max.	Unit	Conditions	Serial data (1)	Serial data (2)	Serial data (3)	Serial data (4)	SW	Measurement point
<General>												
Circuit current	IQ	–	16	35	mA	No signal	000	002	001	003	1	IQ
Output voltage gain	GV	–1.5	0	1.5	dB	VIN=1Vrms	000	002	001	003	2	VOUT
Full harmonic distortion rate	THD	–	0.01	0.09	%	VIN=2Vrms, 400~30kHz	000	002	001	003	2	THD
Maximum output voltage	VOM	2.0	2.5	–	Vrms	THD=1%	000	002	001	003	2	VOUT
Output noise voltage	No	–	5	17	μVrms	Rg=0Ω, IHF–A ＊	000	002	001	003	1	VOUT
Cross-talk between channels	CTC	–	–95	–70	dB	VIN=1Vrms (A1), Rg=0Ω (A2), IHF–A ＊	000	002	001	003 00B	2 (A1) 1 (A2)	VOUT (OUTF2)
Input resistance	RI	33	47	61	kΩ		–	–	–	–	–	–
<Input gain>												
Input maximum gain	GVI	16.5	18	19.5	dB	VIN=200mVrms	018	002	001	003	2	VOUT
Input gain error	ISET	–1.5	0	1.5	dB	VIN=200mVrms	–	–	–	–	–	–
<Main volume>												
Volume control range	V1R	–50	–48	–46	dB	VIN=1Vrms	000	1CA	001	003	2	VOUT
Volume set error 1	V1E1	–1	0	1	dB	0to–30dB, VIN=1Vrms	–	–	–	–	–	–
Volume set error 2	V1E2	–2	0	2	dB	–32to–48dB, VIN=1Vrms	–	–	–	–	–	–
Maximum attenuation	V1MI	–	–95	–85	dB	VIN=1Vrms, IHF–A ＊	000	02A	001	003	2	VOUT
<BBEII>												
Process control range	GBBH	10	12	14	dB	f=10kHz, VIN=200mVrms	000	002	199	003	2	VOUT
Process set error	BBHE	–2	0	2	dB	f=10kHz, VIN=200mVrms	–	–	–	–	–	–
LO CONTOUR voltage gain	GBBL	3	5	7	dB	f=100Hz, VIN=200mVrms	000	002	019 119 099 199	003	2	VOUT
<Bass>												
Bass boost range	GBB	12	14	16	dB	f=500Hz, VIN=200mVrms	000	002	1C1	003	2	VOUT
Bass cut range	GBC	–16	–14	–12	dB	f=500Hz, VIN=200mVrms	000	002	1E1	003	2	VOUT
Bass set error	BSET	–2	0	2	dB	f=500Hz, VIN=200mVrms	–	–	–	–	–	–
<Treble>												
Treble boost range	GTB	12	14	16	dB	f=10kHz, VIN=200mVrms	000	002	1D1	003	2	VOUT
Treble cut range	GTC	–16	–14	–12	dB	f=10kHz, VIN=200mVrms	000	002	1F1	003	2	VOUT
Treble set error	TSET	–2	0	2	dB	f=10Hz, VIN=200mVrms	–	–	–	–	–	–
<Fader>												
Fader control range	V2R	–57	–54	–51	dB	VIN=1Vrms	000	002	001	1B3	2	VOUT
Fader set error	V2E	–2	0	2	dB	VIN=1Vrms	–	–	–	–	–	–
Maximum attenuation	V2MI	–	–90	–85	dB	VIN=1Vrms, IHF–A ＊	000	002	001	073	2	VOUT

VP-9690A (Average value detection, effective value display) IHF-A filter by Matsushita Communication is used for ＊ measurment.
Operation spec : Phase between input / output is same.
Design against radiation-proof is not mode.

●**Measurement circuit**

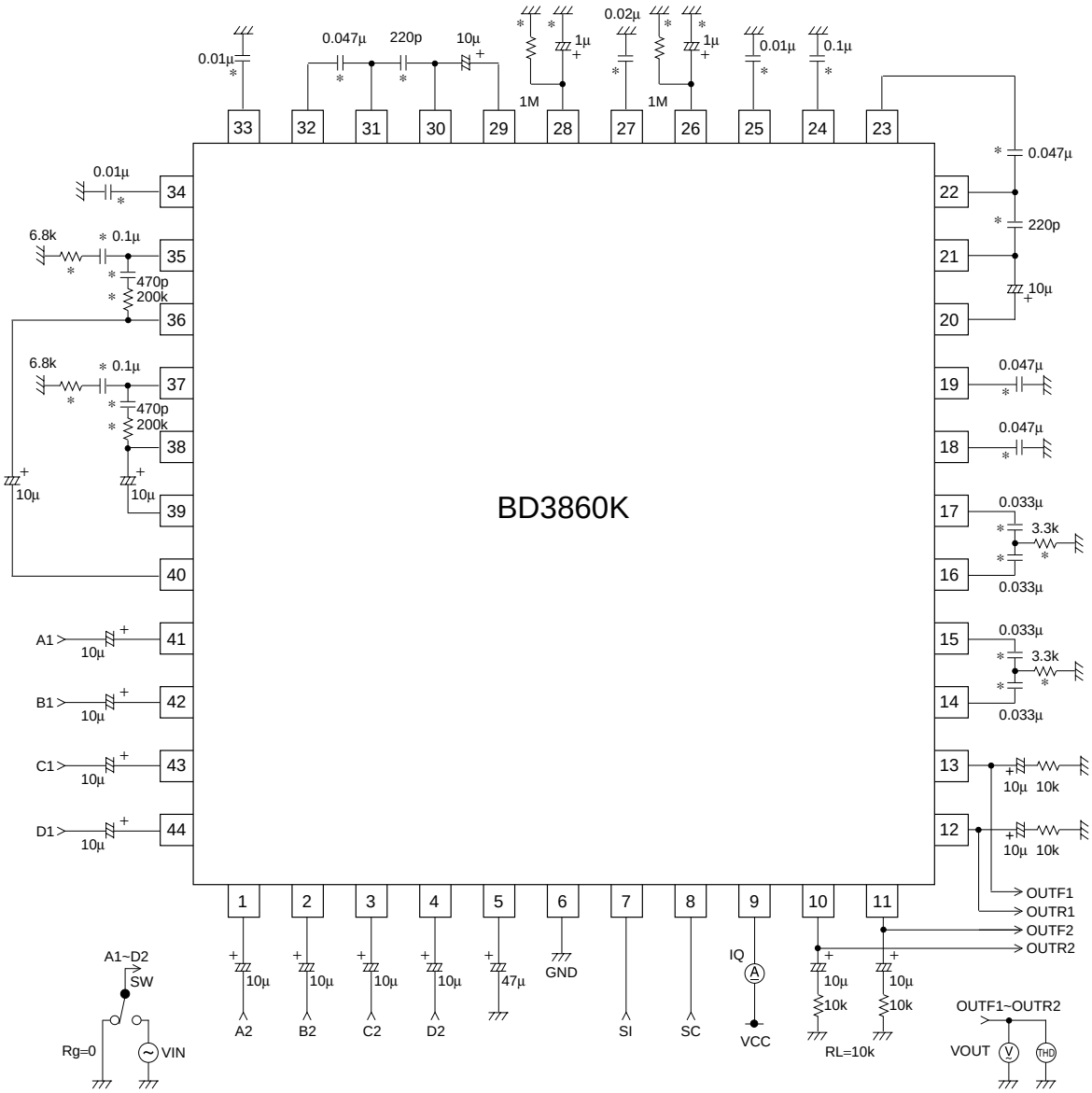

Fig.1 MEASUREMENT CIRCUIT DIAGRAM

Recommendable external parts

1. Element marked with ∗
   - · Carbon-film resistor : ±1%
   - · Film capacitor : ±1%
   - · Ceramic capacitor : ±1%
2. Unless specified particularly, use the following external parts:
   - · Carbon-film resistor : ±5%
   - · Film capacitor : ±20%
   - · Electrolytic capacitor : ±20%

Notes on wiring

1. GND shall be wired solidly.
2. Wiring patter of SI and SC shall be away from that of analog unit and crosstalk shall not be acceptable.
3. Lines of SI and SC of shall not be parallel if possible. The lines shall be shielded, if they are adjacent to each other.

●Circuit operations

Specifications for control signal

(1) Timing of control signal

- Data is read at a leading edge of clock.
- Latch is read at a trailing edge of clock.
- Be sure to set SI to LOW after latching.

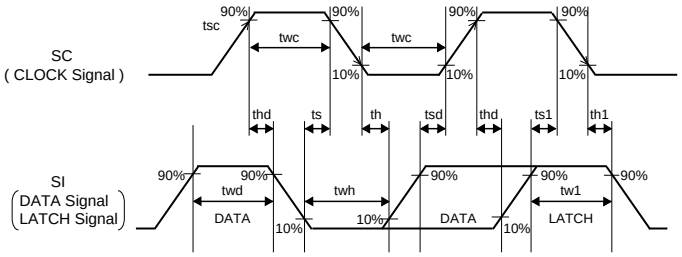

Fig.2

Constant of timing chart (Ta=25°C, V_{CC}=9V)

Parameter	Symbol	Min.	Typ.	Max.	Unit
"High" input voltage	VIH	2.6	–	5.5	V
"Low" input voltage	VIL	0	–	1.1	V
Clock width	Twc	2.0	–	–	µs
Data width	twd	2.0	–	–	µs
Latch width	tw1	2.0	–	–	µs
"Low" hold width	Twh	2.0	–	–	µs
Setup time (DATA→CLK)	Tsd	1.0	–	–	µs
Hold time (CLK→DATA)	Thd	1.0	–	–	µs
Setup time (CLK→LATCH)	ts1	1.0	–	–	µs
Hold time (CLK→LATCH)	th1	1.0	–	–	µs
"Low" setup time	Ts	1.0	–	–	µs
"Low" hold time	Th	1.0	–	–	µs

(2) Control data format list

Input direction

←MSB LSB

	D10	D11	D12	D13	D14	D15	D16	D17	D18	D19
①	0	Input selector 00 : INA, 10 : INB 01 : INC, 11 : IND		Input gain (Refer to a setting table)				Loudness 0 : OFF 1 : ON	Select address 0	0
	D20	D21	D22	D23	D24	D25	D26	D27	D28	D29
②	0	Main volume (Refer to a setting table)						Main volume select 0 : ch1 1 : ch2	Select address 1	0
	D30	D31	D32	D33	D34	D35	D36	D37	D38	D39
③	0	Bass / Treble / BBE II Gain (Refer to a setting table)				Bass / Treble / BBE II Select 00 : Bass 10 : Treble 01 : BBE OFF 11 : BBE ON		0	Select address 0	1
	D40	D41	D42	D43	D44	D45	D46	D47	D48	D49
④	0	Fader volume (Refer to a setting table)					Fader select 00 : Front 1 10 : Front 2 01 : Rear 1 11 : Rear 2		Select address 1	1

・Any of four control data formats can be selected by changing setting of select address.
・Initialize all the four formats of data at every turning on the power supply.

(Example)

Input direction

← MSB LSB MSB LSB MSB LSB MSB LSB

Data ①	L	Data ②	L	Data ③	L	Data ④	L

"L" means "Latch".

・At the second time after turning on the power suopply, set any data to be changed.

(Example) To change the main volume.

Input direction

← MSB LSB

Data ②	L

"L" means "Latch".

(3) Control data format ① setting table

D10
0

▪ Input select

Input	D11	D12
INA	0	0
INB	1	0
INC	0	1
IND	1	1

▪ Input gain

Gain	D13	D14	D15	D16
0dB	0	0	0	0
1dB	1	0	0	0
2dB	0	1	0	0
3dB	1	1	0	0
4dB	0	0	1	0
5dB	1	0	1	0
6dB	0	1	1	0
8dB	1	1	1	0
10dB	0	0	0	1
12dB	1	0	0	1
14dB	0	1	0	1
16dB	1	1	0	1
18dB	0	0	1	1

Note: It is set to 18dB upon any data combination other than the above-mentioned.

▪ Loudness

	D17
OFF	0
ON	1

Select address

D18	D19
0	0

(4) Control data format ② setting table

D20
0

▪ Main volume attenuation

ATT	D21	D22	D23	D24	D25	D26
–0dB	0	0	0	0	0	0
–1dB	1	0	0	0	0	0
–2dB	0	1	0	0	0	0
–3dB	1	1	0	0	0	0
–4dB	0	0	1	0	0	0
–5dB	1	0	1	0	0	0
–6dB	0	1	1	0	0	0
–7dB	1	1	1	0	0	0
–8dB	0	0	0	1	0	0
–9dB	1	0	0	1	0	0
–10dB	0	1	0	1	0	0
–11dB	1	1	0	1	0	0
–12dB	0	0	1	1	0	0
–13dB	1	0	1	1	0	0
–14dB	0	1	1	1	0	0
–15dB	1	1	1	1	0	0
–16dB	0	0	0	0	1	0
–17dB	1	0	0	0	1	0
–18dB	0	1	0	0	1	0
–19dB	1	1	0	0	1	0
–20dB	0	0	1	0	1	0
–21dB	1	0	1	0	1	0
–22dB	0	1	1	0	1	0
–23dB	1	1	1	0	1	0
–24dB	0	0	0	1	1	0
–25dB	1	0	0	1	1	0
–26dB	0	1	0	1	1	0
–27dB	1	1	0	1	1	0
–28dB	0	0	1	1	1	0
–29dB	1	0	1	1	1	0
–30dB	0	1	1	1	1	0
–32dB	1	1	1	1	1	0
–34dB	0	0	0	0	0	1
–36dB	1	0	0	0	0	1
–38dB	0	1	0	0	0	1
–40dB	1	1	0	0	0	1
–42dB	0	0	1	0	0	1
–44dB	1	0	1	0	0	1
–46dB	0	1	1	0	0	1
–48dB	1	1	1	0	0	1
–∞	0	0	0	1	0	1

▪ Main volume select

	D27
CH1	0
CH2	1

Select address

D28	D29
1	0

Note: It is set to –∞ upon any data combination other than the above-mentioned.

(5) Control data format ③ setting table

D30
0

・Tone gain (Bass, Treble)

Gain	D31	D32	D33	D34
0dB	0	0	0	0
2dB	1	0	0	0
4dB	0	1	0	0
6dB	1	1	0	0
8dB	0	0	1	0
10dB	1	0	1	0
12dB	0	1	1	0
14dB	1	1	1	0
0dB	0	0	0	1
–2dB	1	0	0	1
–4dB	0	1	0	1
–6dB	1	1	0	1
–8dB	0	0	1	1
–10dB	1	0	1	1
–12dB	0	1	1	1
–14dB	1	1	1	1

・BBEII gain

Gain		D31	D32	D33	D34
LOW (f=100Hz)	HIGH (f=10kHz)				
5dB	3dB	0	0	*	*
5dB	6dB	1	0	*	*
5dB	9dB	0	1	*	*
5dB	12dB	1	1	*	*

* is 0 or 1

・Bass, Treble
BBE II select

	D35	D36
Bass	0	0
Treble	1	0
BBE OFF	0	1
BBE ON	1	1

D37
0

Select address

D38	D39
0	1

(6) Control data format ④ setting table

D40
0

・Fader volume attenuation

ATT	D41	D42	D43	D44	D45
0dB	0	0	0	0	0
–2dB	1	0	0	0	0
–4dB	0	1	0	0	0
–6dB	1	1	0	0	0
–8dB	0	0	1	0	0
–10dB	1	0	1	0	0
–12dB	0	1	1	0	0
–14dB	1	1	1	0	0
–16dB	0	0	0	1	0
–18dB	1	0	0	1	0
–20dB	0	1	0	1	0
–22dB	1	1	0	1	0
–24dB	0	0	1	1	0
–26dB	1	0	1	1	0
–28dB	0	1	1	1	0
–30dB	1	1	1	1	0
–32dB	0	0	0	0	1
–34dB	1	0	0	0	1
–36dB	0	1	0	0	1
–38dB	1	1	0	0	1
–40dB	0	0	1	0	1
–42dB	1	0	1	0	1
–44dB	0	1	1	0	1
–46dB	1	1	1	0	1
–48dB	0	0	0	1	1
–50dB	1	0	0	1	1
–52dB	0	1	0	1	1
–54dB	1	1	0	1	1
–∞	0	0	1	1	1

Note: It is set to –∞ upon any data combination other than the above-mentioned.

・Fader select

	D46	D47
CH1 Front	0	0
CH2 Front	1	0
CH1 Rear	0	1
CH2 Rear	1	1

Select address

D48	D49
1	1

Control set up of tone control filter
(1) About bass filter

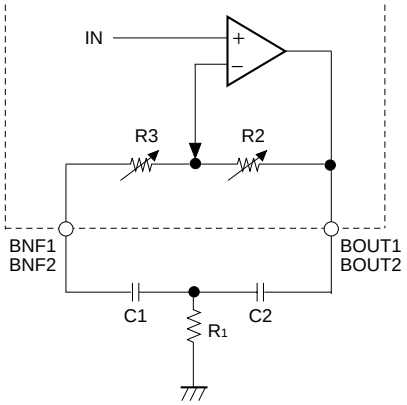

Fig. 3

$$f_O = \frac{1}{2\pi\sqrt{R1\,(R2+R3)\,C1C2}}\ (Hz)$$

$$Q = \frac{\sqrt{R1R2C1C2}}{R1\,(C1+C2)}$$

$$G = 20\log\frac{(R2+R3)\,/\,R1+2}{R3\,/\,R1+2}\ (dB)$$

∗ However C1=C2

Standard value of R2, R3 (reference)
(At C1=C2, R1=3.3kΩ)

Bass burst amount	Resistance (kΩ) ∗Typ.	
	R2	R3
0dB	0	28.45
2dB	7.22	21.23
4dB	12.94	15.51
6dB	17.70	10.75
8dB	21.41	7.04
10dB	24.34	4.11
12dB	26.64	1.81
14dB	28.45	0

∗ Actual burst amount may be dispositioned somewhat.

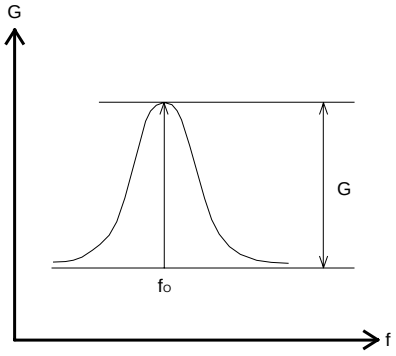

Fig. 4

(2) About treble filter

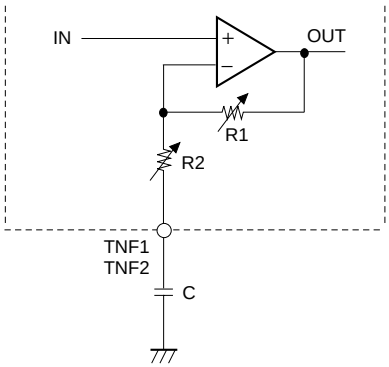

Fig. 5

$$f_O = \frac{1}{2\pi R2C} \quad (Hz)$$

$$G = 20\log \frac{R1+R2+Z_C}{R2+Z_C} \quad (dB)$$

$$Z_C = \frac{1}{j\omega c} \quad (\Omega)$$

Standard value of R2, R1 (reference)

Treble burst amount	Resistance (kΩ) ∗Typ.	
	R1	R2
0dB	0	16.93
2dB	3.49	13.44
4dB	6.25	10.68
6dB	8.45	8.48
8dB	10.19	6.74
10dB	11.58	5.35
12dB	12.68	4.25
14dB	13.55	3.38

∗ Actual burst amount is dispositioned somewhat.

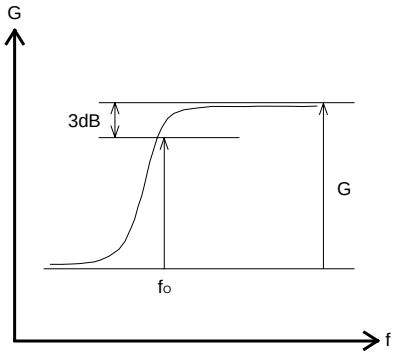

Fig. 6

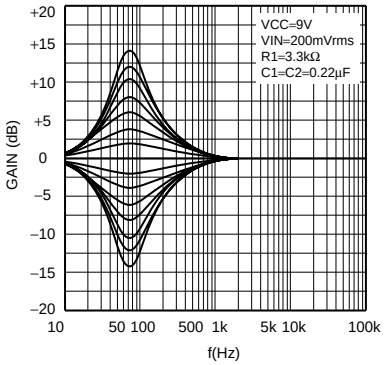

Fig.7 Bass gain-frequency (reference) characteristics

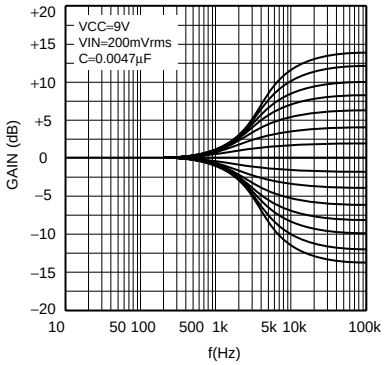

Fig.8 Treble gain-frequency (reference) characteristics

Constant set up tone loudness filter

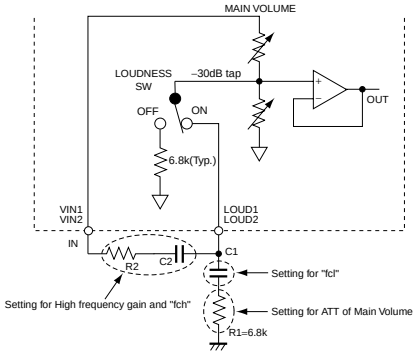

Fig.9

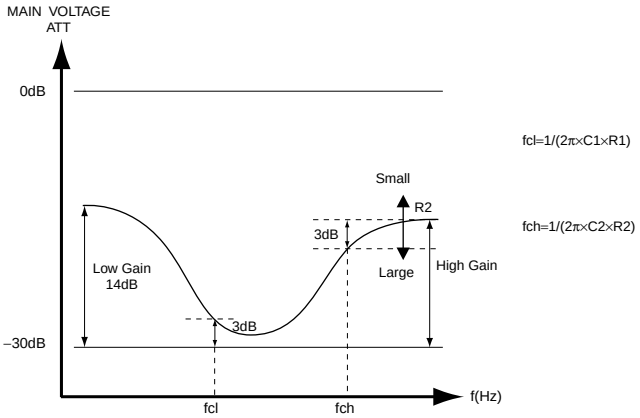

Fig.10

The resistance R1 is used to set for attenuation of main volume at loudness ON. The resistance R1 should be the same 6.8kΩ with inside resistance 6.8kΩ (Typ.) of main volume –30dB tap at loudness OFF. Except this value, the attenuation of main volume at loudness ON is wrong. In the low frequency fully less than "fcl", the voltage gain is fixed on 14dB (Typ.) by inside constant at attenuation –30dB of main volume. The resistance R2 and the capacitor C2 are used to set for the characteristic in high frequency range. The voltage gain in high frequency range can be changed by the value of R2 like the upper figure.

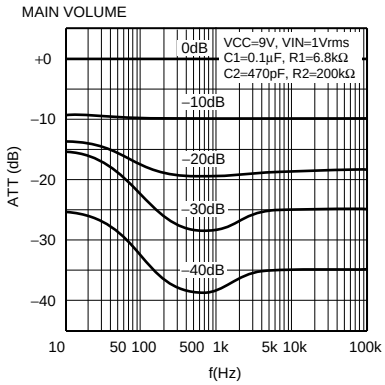

Fig.11 Loudness gain-frequency (reference) characteristics

BBEII explanation of operation

BBEII is a system. This processor treats a loudspeaker and amplifier as an integrated sound system and it exactly reproduces the "rising edge of sound", which characterizes the sound, though appropriate signal processing at a front stage of amplifier input. This mechanism generates the playback sound almost like natural sound.

(1) Problem of sound playback in sound playback system

In the nature world, treble harmonics are produced first usually and then basic low-frequency wave is generated. This is the same with an attacking part which characterizes various kinds of sounds of musical instruments. The character of sound is expressed by the frequency upon rising edge of sound and the amplitude which forms an envelope. Therefore, it is very important to express the rising edge of natural sound exactly upon reproducing the sound through sound playback system. In the sound playback system of today, however, and unavoidable mismatch is made between a loudspeaker and amplifier.

A transistor power amplifier operates as a constant voltage source because of negative feedback technology, while a loudspeaker is a current device. Therefore, an unavoidable mismatch is made in the system. Moreover, the impedance characteristic of loudspeaker various considerably depending on electric reactance of voice coil or mechanical reactance of cone assembly. As a result, the rising edge of sound is distorted and a phase of playback sound is deflected. Furthermore, increased treble impedance reduces the loudspeaker amplitude and harmonics. Therefore, treble constituent is easy to masked by subsequent high-level middle range constituent and the rising edge of sound becomes to hard to be reproduced so exactly.

(2) Principle of operation
BBEII processes the signals to solve the above-mentioned problem of sound playback system as follows:

Phase correction

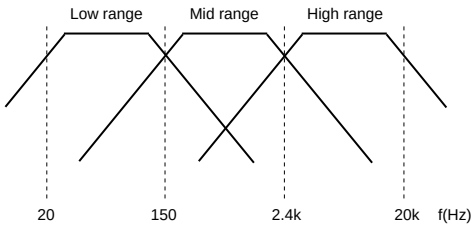

Fig. 12

By dividing the input signal into three frequency bands, the bass (20Hz to 150Hz), middle range (150Hz to 2.4kHz) and by combining them, the phase difference 180° is made between the bass and middle range and 360° between the bass and treble.
Time delay characteristic in every frequency is adjusted through such phase difference and, therefore, the distortion of rising edge of sound can be minimized.

Amplitude correction (Harmonic correction)
High-speed detector and high-performance VCA circuit controls the amplitude of treble constituent to keep appropriate audibility balance at the treble which consists of harmonics. Correction value is decided by both operations at two kinds of levels; one level is set up by serial control from an outside source and another one is obtained by detecting an input signal. The amplitude of treble input into VCA is corrected by an internal control signal obtained through such operations. By this amplitude correction, the harmonics is recovered and the definition level of musical instrument or voice can be enhanced.

Bass boost
The bass constituent is boosted to keep well balance to the treble constituent varying dynamically.
The boost is fixed to 5dB (Typ.) at f=100Hz by an internal circuit and it cannot be controlled externally.

(3) Explanation of external constant
Characteristic of high frequency filter
Frequency characteristic at a maximum process control level is shown in the under-mentioned chart:

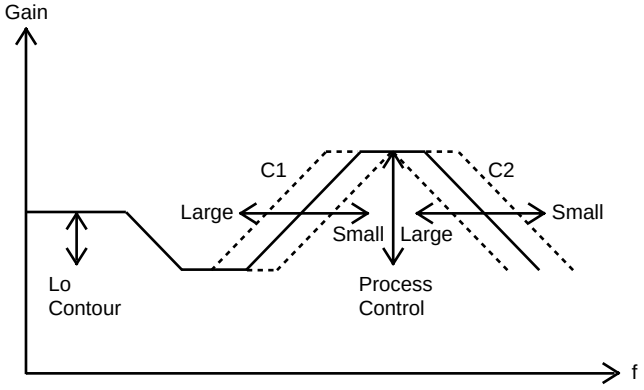

C1 : Capacitor of VCA1-MIX1
Capacitor of VCA2-MIX2
C2 : Capacitor of MIX1-BBOUT1
Capacitor of MIX2-BBOUT2

Fig. 13

As shown in the above-mentioned chart, the cut-off frequency of treble constituent is decided by the external capacitors C1 and C2. The frequency characteristic marked with a dotted line varies depending on this value. Balance of harmonics changes and , therefore, it is an important parameter to decide the sound tone.

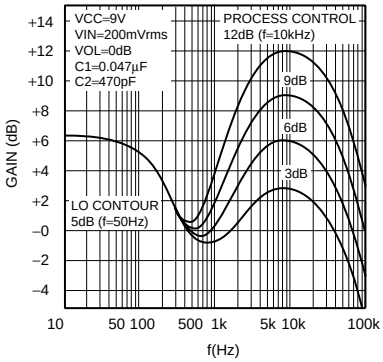

Fig.14 BBEII gain-frequency (reference) characteristics

Controls the amplitude of treble by input signal level
The attack and release time of controls the amplitude of treble can be decided by outside constant.
The pins are DET1 (Pin 28) and DET2 (Pin 26). The method of setting is the lower figure.
The input signal level started to control the amplitude of treble is fixed on about –40dBV (Typ.) by inside circuit. Therefor, it cannot be change from outside pin.

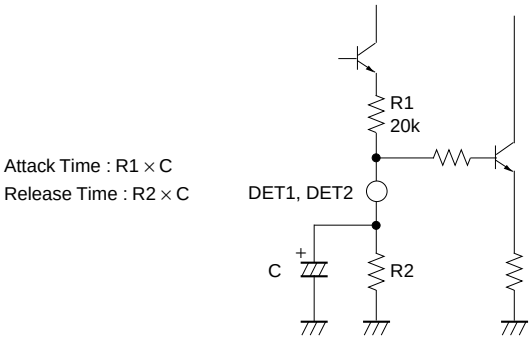

Fig. 15

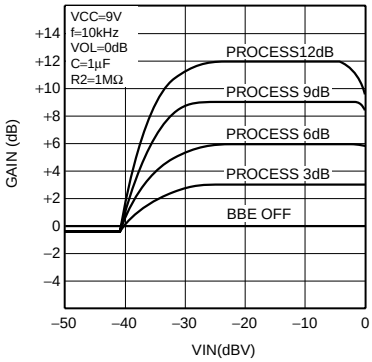

Fig.16 Process control-input voltage (reference) characteristics

Time constant at switching ON/OFF

At switching ON/OFF, this IC is used to switching of time constant, for measuring against DC offset. The pin for setting is DEF (Pin 27). The method of setting is the lower figure.

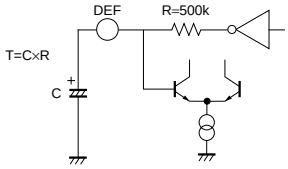

Fig.17

●**Application example**

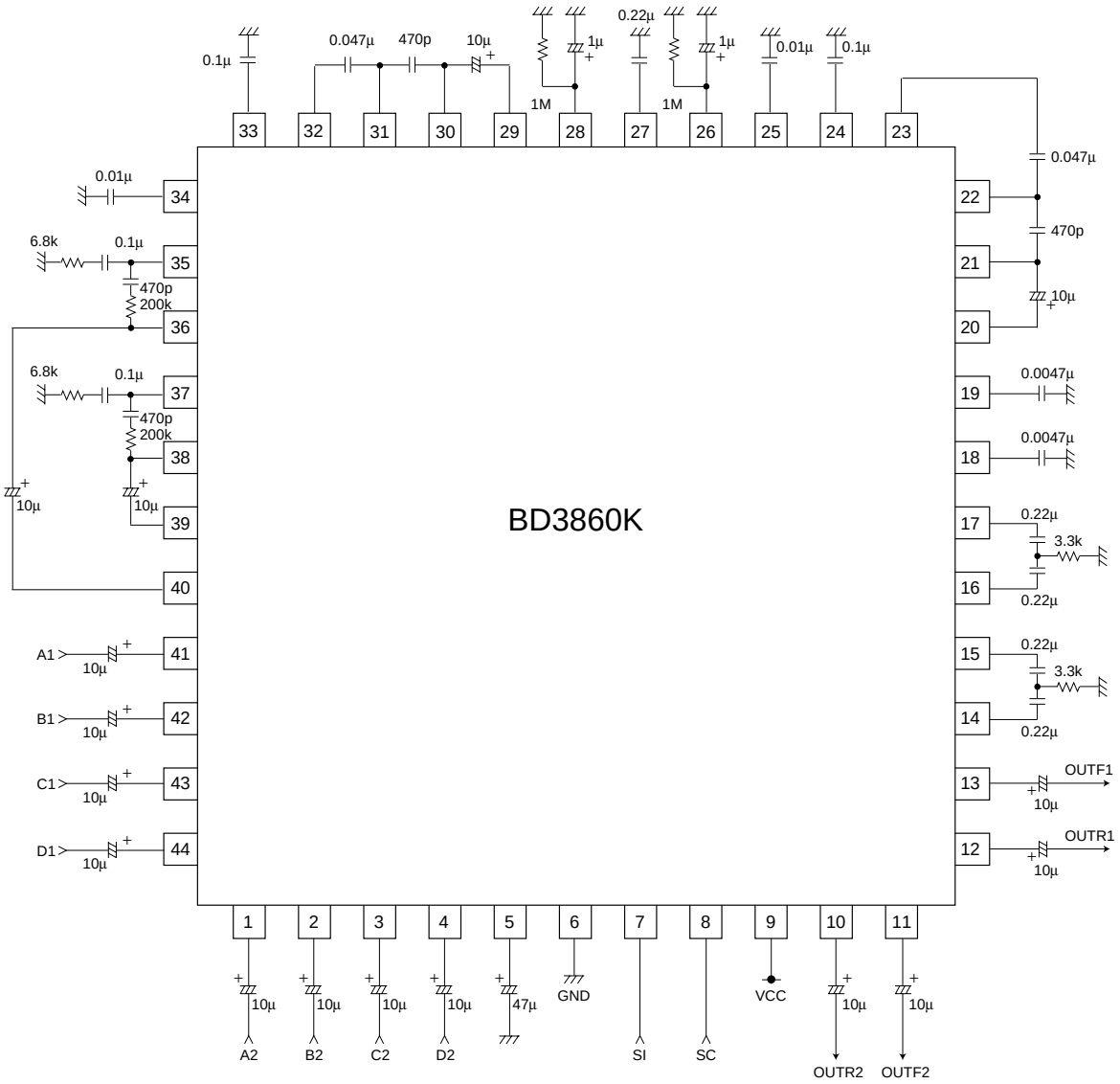

Fig.18

●**Operation notes**

1. About operation voltage supply range
   Within operation voltage supply range, basic circuit function operation is guaranteed within operation ambient temp. But please confirm set up of constant and element, voltage set up and temp set up on use.

2. About operation temp range
   If it within recommended operation voltage range, circuit function operation is guaranteed within operation temp.
   It corralled to conditions of power dissipation to temp.
   Please watch out except condition stipulated by electrical characteristics within the range, It cannot guarantee standard value of electrical characteristics. But it retains original function.

3. About Application circuit
   Example of application circuit drawing is convinced as recommendable, but please confirm characteristic including above mentioned noticed. At use with modification of external constant, please decide with enough margin considering distribution, ETC of this IC, external parts including quiescence characteristics and excessive characteristics. Please note that we have not yet confirmed any concerned patent rights completely.

4. About power on reset
   At on of supply voltage circuit made initialization inside IC is built-in. To be concrete, setting is made so that the following table. Please send data to all address as initial data at supply voltage on. And please supply mute at set side until this initial data is sent.

Function	Initial condition
Input selector	INA
Input gain	0dB
Loudness	OFF
Main volume	–∞dB
Bass gain	0dB
Treble gain	0dB
BBE II	OFF
Fader volume	–∞dB

5. About 2-wire serial control
   High-frequency digital signal is inputted into the SC terminal and SI terminal. So wire and print patterns suitably to prevent interference to analog signal system line.

6. About muting
   When the attenuation of main volume is changed from –48dB to –∞dB, it maybe occur pop noise caused by DC offset. Therefor, to prevent it, please mute by fader volume first of all, and then mute by main volume.
   Conversely, when the muting is released, please by main volume first of all, and then release by fader volume.

7. About the license of BBE Sound Inc.
   This IC is manufactured according to the license of BBE Sound Inc. Upon using it, the license agreement with BBE Sound Inc. is required.

8. About setting of main volume in using BBEII
   Controls the amplitude of treble of BBEII are motioned by detecting the signal level after main volume. Therefor, when the signal is attenuated less than about –40dBV (Typ.) in main volume, controls the amplitude of treble cannot be motioned. To attenuation that dose not spoil the controls the amplitude of treble, please use fader volume.

9. About relation between BBE and the other audio parameter
   When BBE is ON, please use all flat of tone and loudness. And when you use other processor (SRS/Spatializer/Q-Sound etc.), please plan that BBE places in later in later position. When you use Dolby-Surround or Dolby-ProLogic, it is no problem that BBE places in first position to reduce numbers of channels. But if you cannot apply to Dolby lab.
   For permission, BBE places in later position.

●**External dimensions** (Units : mm)

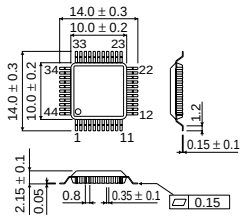

QFP44