Color image sensor head (300 dpi)

IA3004–CA10A

The IA3004–CA10A is a color image sensor head that uses LED chips of the three colors red, green, and blue. Through the use of ROHM's further improvements in optical technologies and LSI circuit designing, the IA3004–CA10A provides excellent color reproducibility and noise resistance and has taken its place as the industry's highest level compact and lightweight image sensor head.

●Applications

Color scanners
Multi–function printers (MFPs)
Image scanning devices

●Features

1) Each sensor IC is equipped with a built - in amplifier for greatly increased noise resistance.
2) Red, green, and blue LED chips are used for the light source to obtain excellent color reproducibility.
3) Uses a single power supply operational amplifier. Operation requires only a single 5 V power supply.
4) Uses a ceramic board as the base board for excellent dimensional stability, and excellent stability in optical characteristics.

●External dimensions (Units: mm)

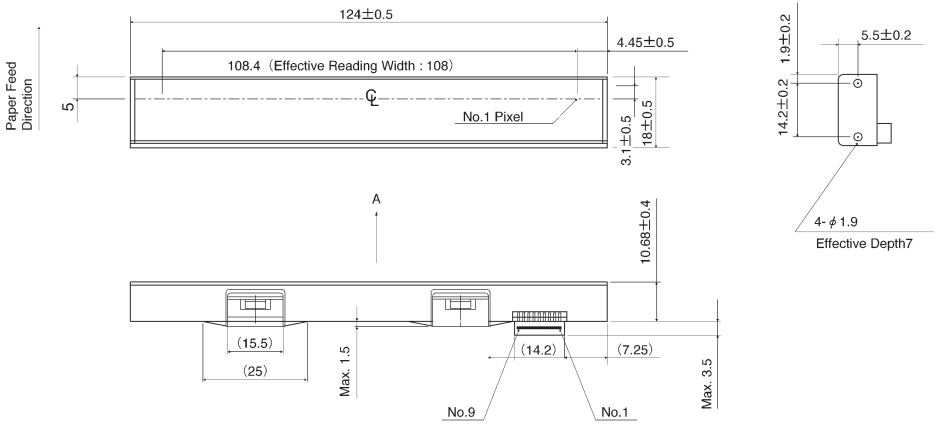

Pin No.	Signal	Pin No.	Signal
No.1	Ao	No.6	R-GND
No.2	GND	No.7	G-GND
No.3	SI	No.8	B-GND
No.4	CLK	No.9	VLED
No.5	V_{DD}		

Note:

（Compatible with FPC / FFC connectors）
t=0.3±0.05, 1.25 pitch（with reinforcement plate）

●Characteristics

Parameter	Symbol	Typ.		Unit
Effective scanning width	—	108		mm
Primary scan dot density	—	300		DPI
Total dot number	—	1280		dots
Power supply voltage	V_{DD}	5		V
Scanning speed	SLT	6.3	12	ms / line
Clock frequency	CLK	1.5	1	MHz
Maximum dynamic range	VRMax.	0.8	1.5	V
Minimum dynamic range	VRMin.	0.4	0.8	V
Dark output	Vod	1.2±0.6		V
Operating temperature	—	5～45		℃

●Pin assignments

No.	Circuit	I / O	Functions
1	Ao	O	Analog output
2	GND	I	Ground
3	SI	I	Serial-in
4	CLK	I	Clock
5	V_{DD}	I	Power supply
6	R-GND	I	LED red ground
7	G-GND	I	LED green ground
8	B-GND	I	LED blue ground
9	VLED	I	LED power supply

●Timing chart

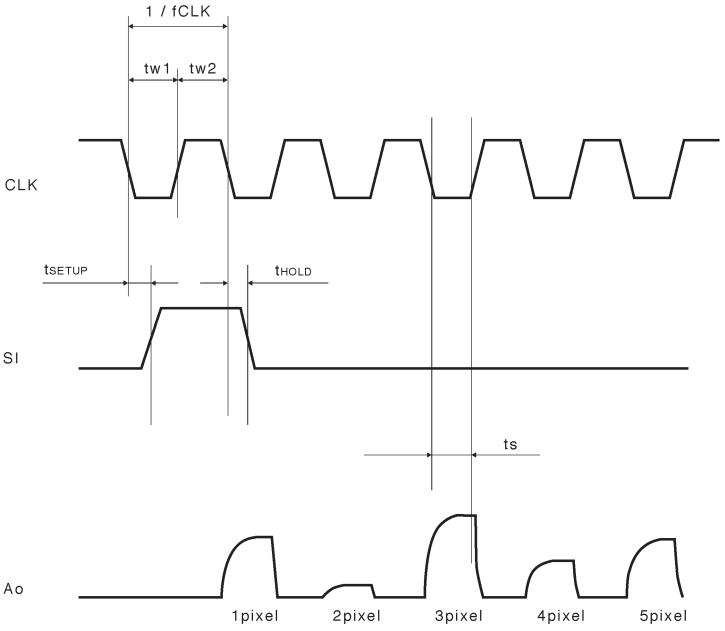

Fig.1

●Equivalent circuit

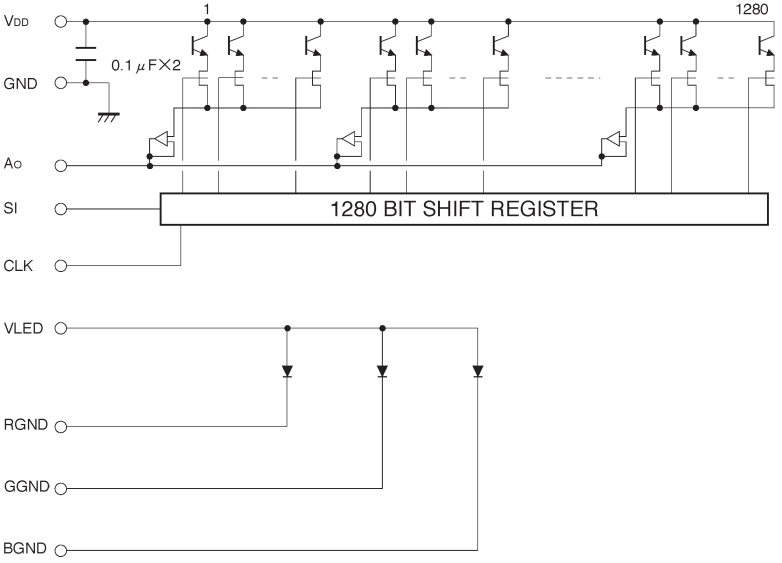

Fig.2