24AA128/24LC128/24FC128

128K I²C™ CMOS Serial EEPROM

DEVICE SELECTION TABLE

Part Number	Vcc Range	Max Clock Frequency	Temp Ranges
24AA128	1.8-5.5V	400 kHz†	I
24LC128	2.5-5.5V	400 kHz‡	I, E
24FC128	2.5-5.5V	1 MHz	I

†100 kHz for Vcc < 2.5V.
‡100 kHz for E temperature range.

FEATURES

- Low power CMOS technology
  - Maximum write current 3 mA at 5.5V
  - Maximum read current 400 µA at 5.5V
  - Standby current 100 nA typical at 5.5V
- 2-wire serial interface bus, I²C compatible
- Cascadable for up to eight devices
- Self-timed ERASE/WRITE cycle
- 64-byte page-write mode available
- 5 ms max write-cycle time
- Hardware write protect for entire array
- Output slope control to eliminate ground bounce
- Schmitt trigger inputs for noise suppression
- 1,000,000 erase/write cycles guaranteed
- Electrostatic discharge protection > 4000V
- Data retention > 200 years
- 8-pin PDIP and SOIC (150 and 208 mil) packages
- 14-pin TSSOP package
- Temperature ranges:
  - Industrial (I): -40°C to +85°C
  - Automotive (E): -40°C to +125°C

DESCRIPTION

The Microchip Technology Inc. 24AA128/24LC128/24FC128 (24XX128*) is a 16K x 8 (128K bit) Serial Electrically Erasable PROM, capable of operation across a broad voltage range (1.8V to 5.5V). It has been developed for advanced, low power applications such as personal communications or data acquisition. This device also has a page-write capability of up to 64 bytes of data. This device is capable of both random and sequential reads up to the 128K boundary. Functional address lines allow up to eight devices on the same bus, for up to 1M bit address space. This device is available in the standard 8-pin plastic DIP, 8-pin SOIC (150 and 208 mil), and 14-pin TSSOP packages.

PACKAGE TYPE

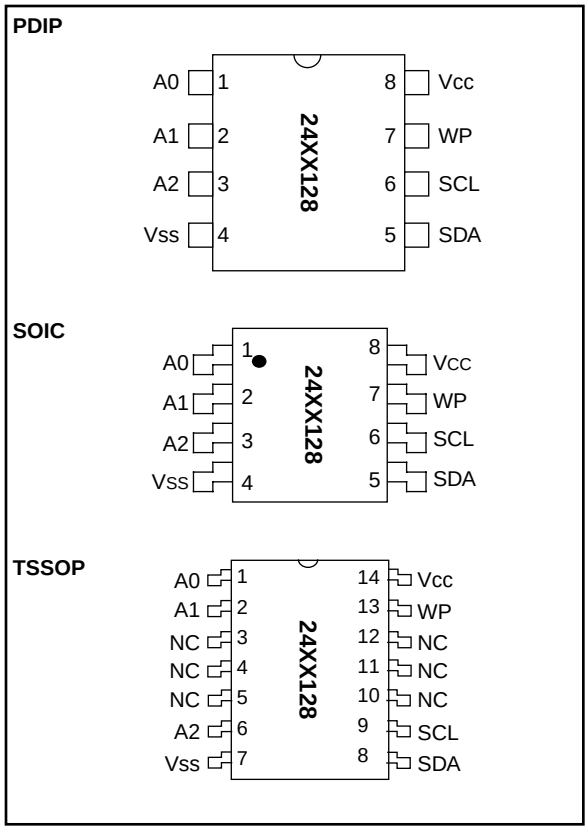

BLOCK DIAGRAM

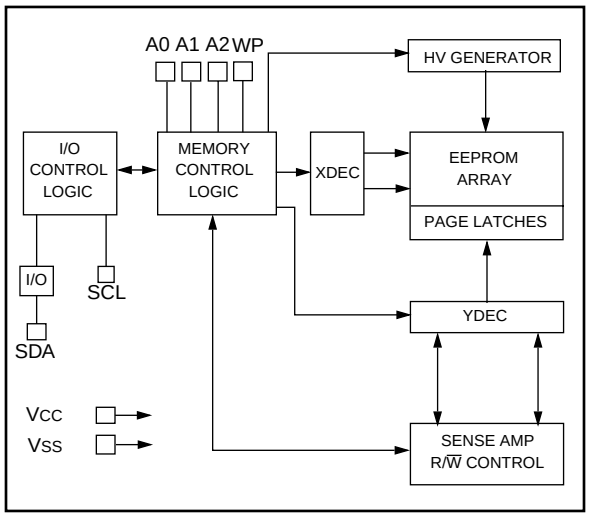

I²C is a trademark of Philips Corporation.
*24XX128 is used in this document as a generic part number for the 24AA128/24LC128/24FC128 devices.

1.0 ELECTRICAL CHARACTERISTICS

1.1 Maximum Ratings*

VCC 6.5V
All inputs and outputs w.r.t. VSS .... -0.6V to VCC +1.0V
Storage temperature .....-65°C to +150°C
Ambient temp. with power applied.....-65°C to +125°C
Soldering temperature of leads (10 seconds) ..+300°C
ESD protection on all pins.....≥ 4 kV

***Notice:** Stresses above those listed under "Maximum Ratings" may cause permanent damage to the device. This is a stress rating only and functional operation of the device at those or any other conditions above those indicated in the operational listings of this specification is not implied. Exposure to maximum rating conditions for extended periods may affect device reliability.

TABLE 1-1: PIN FUNCTION TABLE

Name	Function
A0, A1, A2	User Configurable Chip Selects
VSS	Ground
SDA	Serial Data
SCL	Serial Clock
WP	Write Protect Input
VCC	+1.8 to 5.5V (24AA128) +2.5 to 5.5V (24LC128)

TABLE 1-2: DC CHARACTERISTICS

All parameters apply across the specified operating ranges, unless otherwise noted.	Industrial (I): VCC = +1.8V to 5.5V Tamb = -40°C to +85°C Automotive (E): VCC = +4.5V to 5.5V Tamb = -40°C to 125°C				
Parameter	**Symbol**	**Min**	**Max**	**Units**	**Conditions**
A0, A1, A2, SCL, SDA, and WP pins:					
High level input voltage	VIH	0.7 VCC	—	V	
Low level input voltage	VIL	—	0.3 VCC	V	VCC ≥ 2.5V
			0.2 VCC	V	VCC < 2.5V
Hysteresis of Schmitt Trigger inputs (SDA, SCL pins)	VHYS	0.05 VCC	—	V	VCC ≥ 2.5V (Note)
Low level output voltage	VOL	—	0.40	V	IOL = 3.0 mA @ VCC = 4.5V IOL = 2.1 mA @ VCC = 2.5V
Input leakage current	ILI	-10	10	µA	VIN = VSS or VCC, WP = VSS VIN = VSS or VCC, WP = VCC
Output leakage current	ILO	-10	10	µA	VOUT = VSS or VCC
Pin capacitance (all inputs/outputs)	CIN, COUT	—	10	pF	VCC = 5.0V (Note) Tamb = 25°C, f_c= 1 MHz
Operating current	ICC Read	—	400	µA	VCC = 5.5V, SCL = 400 kHz
	ICC Write	—	3	mA	VCC = 5.5V
Standby current	ICCS	—	1	µA	SCL = SDA = VCC = 5.5V A0, A1, A2, WP = VSS

Note: This parameter is periodically sampled and not 100% tested.

FIGURE 1-1: BUS TIMING DATA

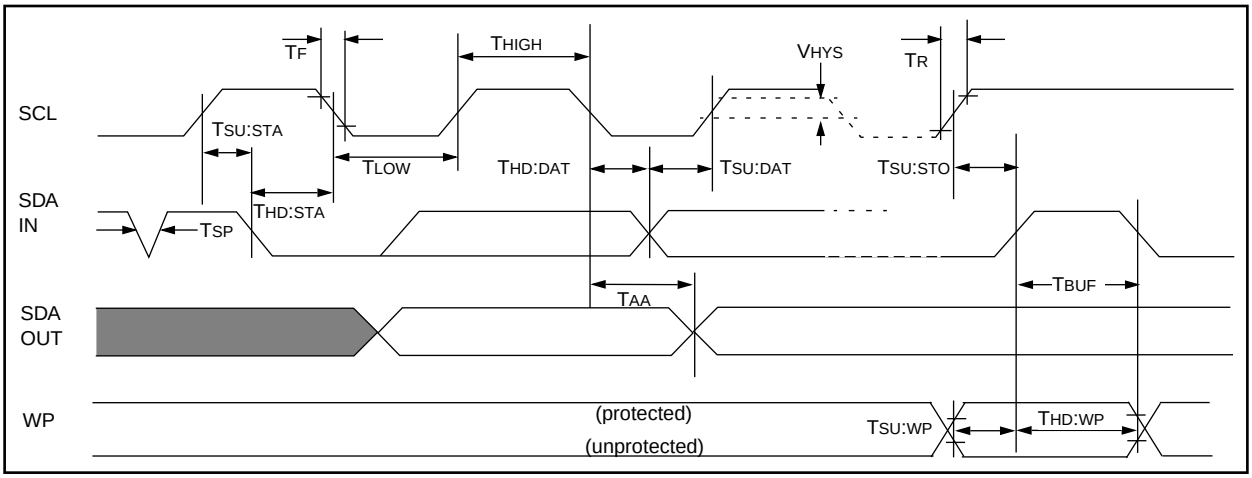

 © 1998 Microchip Technology Inc.

TABLE 1-3: AC CHARACTERISTICS

All parameters apply across the specified operating ranges unless otherwise noted.	Industrial (I): V_{CC} = +1.8V to 5.5V Tamb = -40°C to +85°C Automotive (E): V_{CC} = +4.5V to 5.5V Tamb = -40°C to 125°C				
Parameter	Symbol	Min	Max	Units	Conditions
Clock frequency	F_{CLK}	— — — —	100 100 400 1000	kHz	4.5V ≤ V_{CC} ≤ 5.5V (E Temp range) 1.8V ≤ V_{CC} ≤ 2.5V 2.5V ≤ V_{CC} ≤ 5.5V 24FC128 (2.5 V ≤ Vcc ≤ 5.5 V)
Clock high time	T_{HIGH}	4000 4000 600 500	— — — —	ns	4.5V ≤ V_{CC} ≤ 5.5V (E Temp range) 1.8V ≤ V_{CC} ≤ 2.5V 2.5V ≤ V_{CC} ≤ 5.5V 24FC128 (2.5 V ≤ Vcc ≤ 5.5 V)
Clock low time	T_{LOW}	4700 4700 1300 500	— — — —	ns	4.5V ≤ V_{CC} ≤ 5.5V (E Temp range) 1.8V ≤ V_{CC} ≤ 2.5V 2.5V ≤ V_{CC} ≤ 5.5V 24FC128 (2.5 V ≤ Vcc ≤ 5.5 V)
SDA and SCL rise time (Note 1)	T_R	— — — —	1000 1000 300 300	ns	4.5V ≤ V_{CC} ≤ 5.5V (E Temp range) 1.8V ≤ V_{CC} ≤ 2.5V 2.5V ≤ V_{CC} ≤ 5.5V 24FC128 (2.5 V ≤ Vcc ≤ 5.5 V)
SDA and SCL fall time (Note 1)	T_F	— —	300 100	ns	All except 24FC128 24FC128 (2.5 V ≤ Vcc ≤ 5.5 V)
START condition hold time	$T_{HD:STA}$	4000 4000 600 250	— — — —	ns	4.5V ≤ V_{CC} ≤ 5.5V (E Temp range) 1.8V ≤ V_{CC} ≤ 2.5V 2.5V ≤ V_{CC} ≤ 5.5V 24FC128 (2.5 V ≤ Vcc ≤ 5.5 V)
START condition setup time	$T_{SU:STA}$	4700 4700 600 250	— — — —	ns	4.5V ≤ V_{CC} ≤ 5.5V (E Temp range) 1.8V ≤ V_{CC} ≤ 2.5V 2.5V ≤ V_{CC} ≤ 5.5V 24FC128 (2.5 V ≤ Vcc ≤ 5.5 V)
Data input hold time	$T_{HD:DAT}$	0	—	ns	(Note 2)
Data input setup time	$T_{SU:DAT}$	250 250 100 100	— — — —	ns	4.5V ≤ V_{CC} ≤ 5.5V (E Temp range) 1.8V ≤ V_{CC} ≤ 2.5V 2.5V ≤ V_{CC} ≤ 5.5V 24FC128 (2.5 V ≤ Vcc ≤ 5.5 V)
STOP condition setup time	$T_{SU:STO}$	4000 4000 600 250	— — — —	ns	4.5V ≤ V_{CC} ≤ 5.5V (E Temp range) 1.8V ≤ V_{CC} ≤ 2.5V 2.5V ≤ V_{CC} ≤ 5.5V 24FC128 (2.5 V ≤ Vcc ≤ 5.5 V)
WP setup time	$T_{SU:WP}$	4000 4000 600 600	— — — —	ns	4.5V ≤ V_{CC} ≤ 5.5V (E Temp range) 1.8V ≤ V_{CC} ≤ 2.5V 2.5V ≤ V_{CC} ≤ 5.5V 24FC128 (2.5 V ≤ Vcc ≤ 5.5 V)
WP hold time	$T_{HD:WP}$	4700 4700 1300 1300	— — — —	ns	4.5V ≤ V_{CC} ≤ 5.5V (E Temp range) 1.8V ≤ V_{CC} ≤ 2.5V 2.5V ≤ V_{CC} ≤ 5.5V 24FC128 (2.5 V ≤ Vcc ≤ 5.5 V)

Note 1: Not 100% tested. C_B = total capacitance of one bus line in pF.

2: As a transmitter, the device must provide an internal minimum delay time to bridge the undefined region (minimum 300 ns) of the falling edge of SCL to avoid unintended generation of START or STOP conditions.

3: The combined T_{SP} and V_{HYS} specifications are due to new Schmitt trigger inputs which provide improved noise spike suppression. This eliminates the need for a TI specification for standard operation.

4: This parameter is not tested but guaranteed by characterization. For endurance estimates in a specific application, please consult the Total Endurance Model which can be obtained on Microchip's BBS or website.

TABLE 1-3: AC CHARACTERISTICS (CONTINUED)

All parameters apply across the specified operating ranges unless otherwise noted.	Industrial (I): V_{CC} = +1.8V to 5.5V Tamb = -40°C to +85°C Automotive (E): V_{CC} = +4.5V to 5.5V Tamb = -40°C to 125°C				
Parameter	Symbol	Min	Max	Units	Conditions
Output valid from clock (Note 2)	T_{AA}	— — — —	3500 3500 900 400	ns	4.5V ≤ V_{CC} ≤ 5.5V (E Temp range) 1.8V ≤ V_{CC} ≤ 2.5V 2.5V ≤ V_{CC} ≤ 5.5V 24FC128 (2.5 V ≤ Vcc ≤ 5.5 V)
Bus free time: Time the bus must be free before a new transmission can start	T_{BUF}	4700 4700 1300 500	— — — —	ns	4.5V ≤ V_{CC} ≤ 5.5V (E Temp range) 1.8V ≤ V_{CC} ≤ 2.5V 2.5V ≤ V_{CC} ≤ 5.5V 24FC128 (2.5 V ≤ Vcc ≤ 5.5 V)
Output fall time from V_{IH} minimum to V_{IL} maximum C_B ≤ 100 pF	T_{OF}	10 + 0.1C_B	250 250	ns	All except 24FC128 (Note 1) 24FC128 (Note 1)
Input filter spike suppression (SDA and SCL pins)	T_{SP}	—	50	ns	All except 24FC128 (Notes 1 and 3)
Write cycle time (byte or page)	T_{WC}	—	5	ms	
Endurance		1M	—	cycles	25°C, V_{CC} = 5.0V, Block Mode (Note 4)

Note 1: Not 100% tested. C_B = total capacitance of one bus line in pF.

2: As a transmitter, the device must provide an internal minimum delay time to bridge the undefined region (minimum 300 ns) of the falling edge of SCL to avoid unintended generation of START or STOP conditions.

3: The combined T_{SP} and V_{HYS} specifications are due to new Schmitt trigger inputs which provide improved noise spike suppression. This eliminates the need for a TI specification for standard operation.

4: This parameter is not tested but guaranteed by characterization. For endurance estimates in a specific application, please consult the Total Endurance Model which can be obtained on Microchip's BBS or website.

2.0 PIN DESCRIPTIONS

2.1 A0, A1, A2 Chip Address Inputs

The A0, A1, A2 inputs are used by the 24XX128 for multiple device operations. The levels on these inputs are compared with the corresponding bits in the slave address. The chip is selected if the compare is true.

Up to eight devices may be connected to the same bus by using different chip select bit combinations. If left unconnected, these inputs will be pulled down internally to V_{SS}.

2.2 SDA Serial Data

This is a bi-directional pin used to transfer addresses and data into and data out of the device. It is an open-drain terminal, therefore, the SDA bus requires a pullup resistor to V_{CC} (typical 10 kΩ for 100 kHz, 2 kΩ for 400 kHz and 1 MHz).

For normal data transfer SDA is allowed to change only during SCL low. Changes during SCL high are reserved for indicating the START and STOP conditions.

2.3 SCL Serial Clock

This input is used to synchronize the data transfer from and to the device.

2.4 WP

This pin can be connected to either V_{SS}, V_{CC} or left floating. An internal pull-down resistor on this pin will keep the device in the unprotected state if left floating. If tied to V_{SS} or left floating, normal memory operation is enabled (read/write the entire memory 0000-3FFF).

If tied to V_{CC}, WRITE operations are inhibited. Read operations are not affected.

3.0 FUNCTIONAL DESCRIPTION

The 24XX128 supports a bi-directional 2-wire bus and data transmission protocol. A device that sends data onto the bus is defined as a transmitter, and a device receiving data as a receiver. The bus must be controlled by a master device which generates the serial clock (SCL), controls the bus access, and generates the START and STOP conditions while the 24XX128 works as a slave. Both master and slave can operate as a transmitter or receiver, but the master device determines which mode is activated.

 © 1998 Microchip Technology Inc.

4.0 BUS CHARACTERISTICS

The following **bus protocol** has been defined:

- Data transfer may be initiated only when the bus is not busy.
- During data transfer, the data line must remain stable whenever the clock line is HIGH. Changes in the data line while the clock line is HIGH will be interpreted as a START or STOP condition.

Accordingly, the following bus conditions have been defined (Figure 4-1).

4.1 Bus not Busy (A)

Both data and clock lines remain HIGH.

4.2 Start Data Transfer (B)

A HIGH to LOW transition of the SDA line while the clock (SCL) is HIGH determines a START condition. All commands must be preceded by a START condition.

4.3 Stop Data Transfer (C)

A LOW to HIGH transition of the SDA line while the clock (SCL) is HIGH determines a STOP condition. All operations must end with a STOP condition.

4.4 Data Valid (D)

The state of the data line represents valid data when, after a START condition, the data line is stable for the duration of the HIGH period of the clock signal.

The data on the line must be changed during the LOW period of the clock signal. There is one bit of data per clock pulse.

Each data transfer is initiated with a START condition and terminated with a STOP condition. The number of the data bytes transferred between the START and STOP conditions is determined by the master device.

4.5 Acknowledge

Each receiving device, when addressed, is obliged to generate an acknowledge signal after the reception of each byte. The master device must generate an extra clock pulse which is associated with this acknowledge bit.

Note:	The 24XX128 does not generate any acknowledge bits if an internal programming cycle is in progress.

A device that acknowledges must pull down the SDA line during the acknowledge clock pulse in such a way that the SDA line is stable LOW during the HIGH period of the acknowledge related clock pulse. Of course, setup and hold times must be taken into account. During reads, a master must signal an end of data to the slave by NOT generating an acknowledge bit on the last byte that has been clocked out of the slave. In this case, the slave (24XX128) will leave the data line HIGH to enable the master to generate the STOP condition.

FIGURE 4-1: DATA TRANSFER SEQUENCE ON THE SERIAL BUS

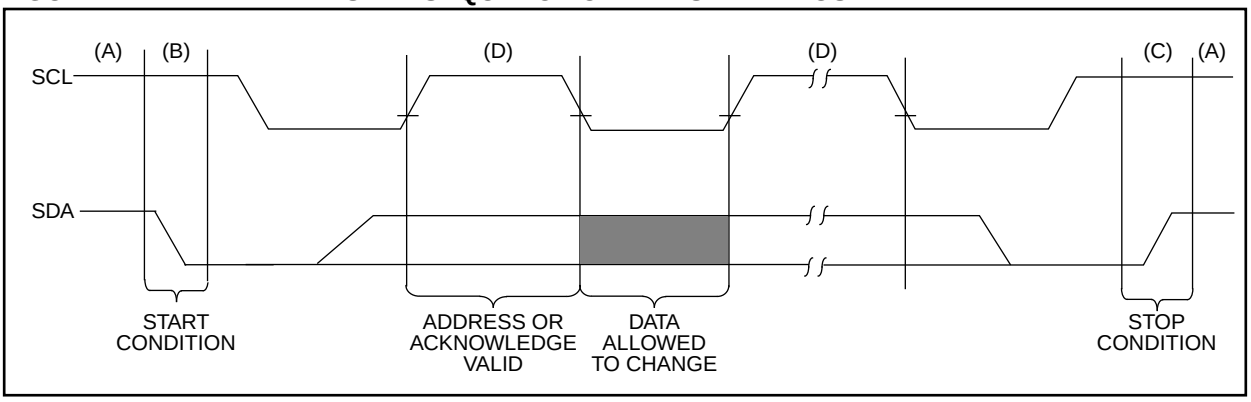

FIGURE 4-2: ACKNOWLEDGE TIMING

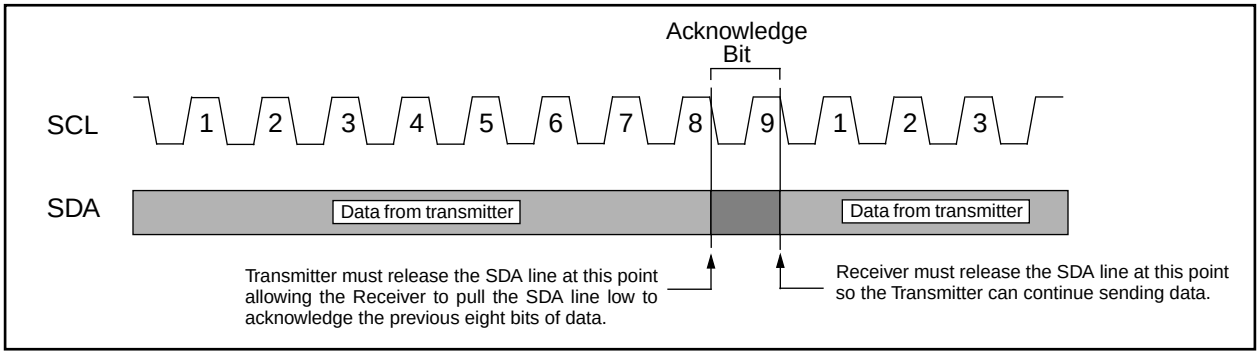

5.0 DEVICE ADDRESSING

A control byte is the first byte received following the start condition from the master device (Figure 5-1). The control byte consists of a 4-bit control code; for the 24XX128 this is set as 1010 binary for read and write operations. The next three bits of the control byte are the chip select bits (A2, A1, A0). The chip select bits allow the use of up to eight 24XX128 devices on the same bus and are used to select which device is accessed. The chip select bits in the control byte must correspond to the logic levels on the corresponding A2, A1, and A0 pins for the device to respond. These bits are in effect the three most significant bits of the word address.

The last bit of the control byte defines the operation to be performed. When set to a one a read operation is selected, and when set to a zero a write operation is selected. The next two bytes received define the address of the first data byte (Figure 5-2). Because only A13…A0 are used, the upper two address bits are don't care bits. The upper address bits are transferred first, followed by the less significant bits.

Following the start condition, the 24XX128 monitors the SDA bus checking the device type identifier being transmitted. Upon receiving a 1010 code and appropriate device select bits, the slave device outputs an acknowledge signal on the SDA line. Depending on the state of the R/$\overline{W}$ bit, the 24XX128 will select a read or write operation.

FIGURE 5-1: CONTROL BYTE FORMAT

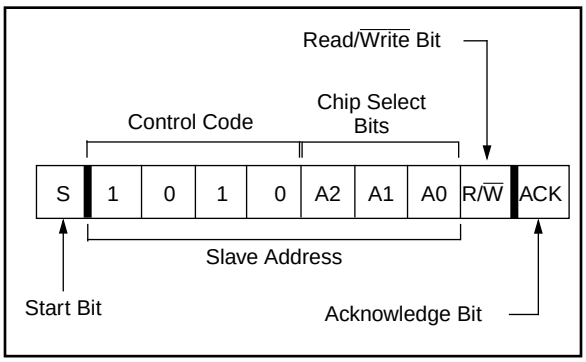

5.1 Contiguous Addressing Across Multiple Devices

The chip select bits A2, A1, A0 can be used to expand the contiguous address space for up to 1 Mbit by adding up to eight 24XX128's on the same bus. In this case, software can use A0 of the control byte as address bit A14; A1, as address bit A15; and A2, as address bit A16. It is not possible to sequentially read across device boundaries.

FIGURE 5-2: ADDRESS SEQUENCE BIT ASSIGNMENTS

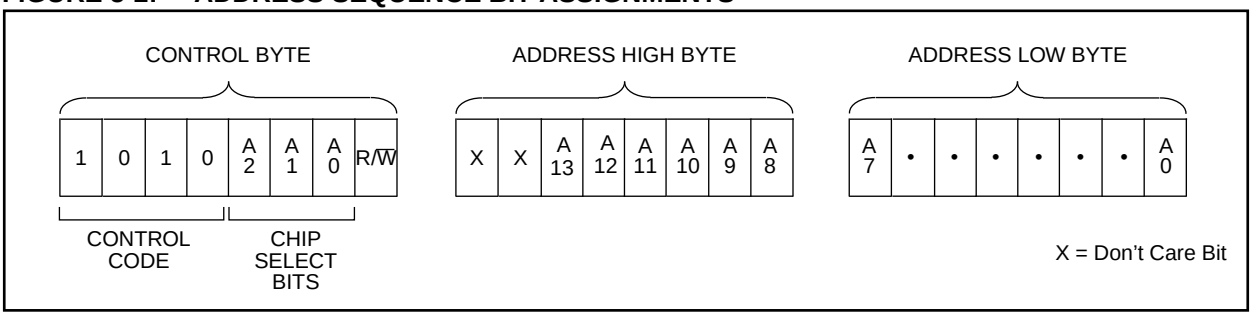

Preliminary
© 1998 Microchip Technology Inc.

6.0 WRITE OPERATIONS

6.1 Byte Write

Following the start condition from the master, the control code (four bits), the chip select (three bits), and the R/$\overline{W}$ bit (which is a logic low) are clocked onto the bus by the master transmitter. This indicates to the addressed slave receiver that the address high byte will follow after it has generated an acknowledge bit during the ninth clock cycle. Therefore, the next byte transmitted by the master is the high-order byte of the word address and will be written into the address pointer of the 24XX128. The next byte is the least significant address byte. After receiving another acknowledge signal from the 24XX128, the master device will transmit the data word to be written into the addressed memory location. The 24XX128 acknowledges again and the master generates a stop condition. This initiates the internal write cycle, and, during this time, the 24XX128 will not generate acknowledge signals (Figure 6-1). If an attempt is made to write to the array with the WP pin held high, the device will acknowledge the command but no write cycle will occur, no data will be written, and the device will immediately accept a new command. After a byte write command, the internal address counter will point to the address location following the one that was just written.

6.2 Page Write

The write control byte, word address, and the first data byte are transmitted to the 24XX128 in the same way as in a byte write. But instead of generating a stop condition, the master transmits up to 63 additional bytes, which are temporarily stored in the on-chip page buffer and will be written into memory after the master has transmitted a stop condition. After receipt of each word, the six lower address pointer bits are internally incremented by one. If the master should transmit more than 64 bytes prior to generating the stop condition, the address counter will roll over and the previously received data will be overwritten. As with the byte write operation, once the stop condition is received, an internal write cycle will begin (Figure 6-2). If an attempt is made to write to the array with the WP pin held high, the device will acknowledge the command but no write cycle will occur, no data will be written, and the device will immediately accept a new command.

6.3 Write Protection

The WP pin allows the user to write-protect the entire array (0000-3FFF) when the pin is tied to V_{CC}. If tied to V_{SS} or left floating, the write protection is disabled. The WP pin is sampled at the STOP bit for every write command (Figure 1-1) Toggling the WP pin after the STOP bit will have no effect on the execution of the write cycle.

FIGURE 6-1: BYTE WRITE

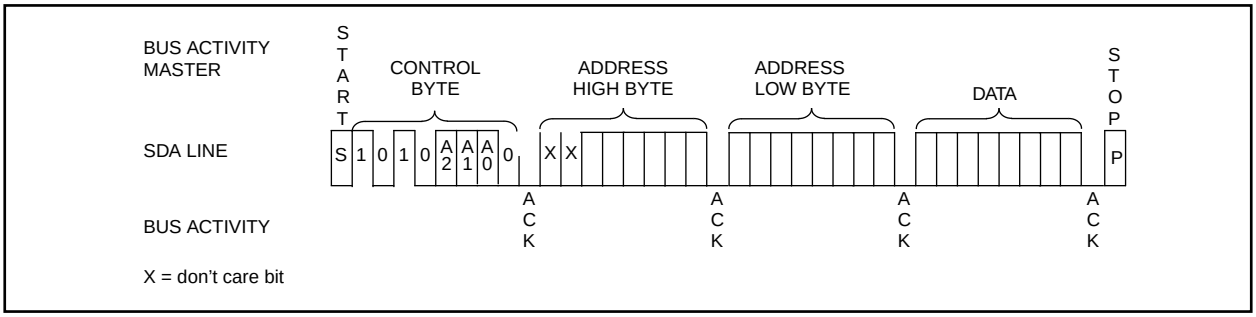

FIGURE 6-2: PAGE WRITE

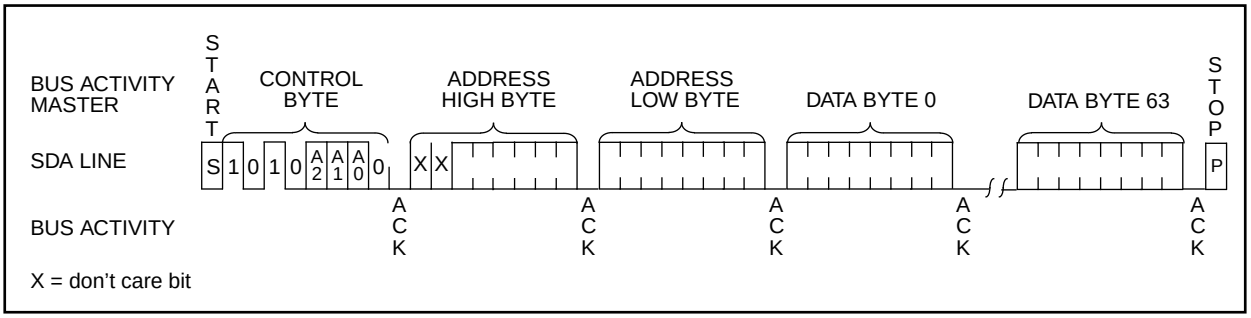

7.0 ACKNOWLEDGE POLLING

Since the device will not acknowledge during a write cycle, this can be used to determine when the cycle is complete (This feature can be used to maximize bus throughput.) Once the stop condition for a write command has been issued from the master, the device initiates the internally timed write cycle. ACK polling can be initiated immediately. This involves the master sending a start condition, followed by the control byte for a write command (R/$\overline{W}$ = 0). If the device is still busy with the write cycle, then no ACK will be returned. If no ACK is returned, then the start bit and control byte must be resent. If the cycle is complete, then the device will return the ACK, and the master can then proceed with the next read or write command. See Figure 7-1 for flow diagram.

FIGURE 7-1: ACKNOWLEDGE POLLING FLOW

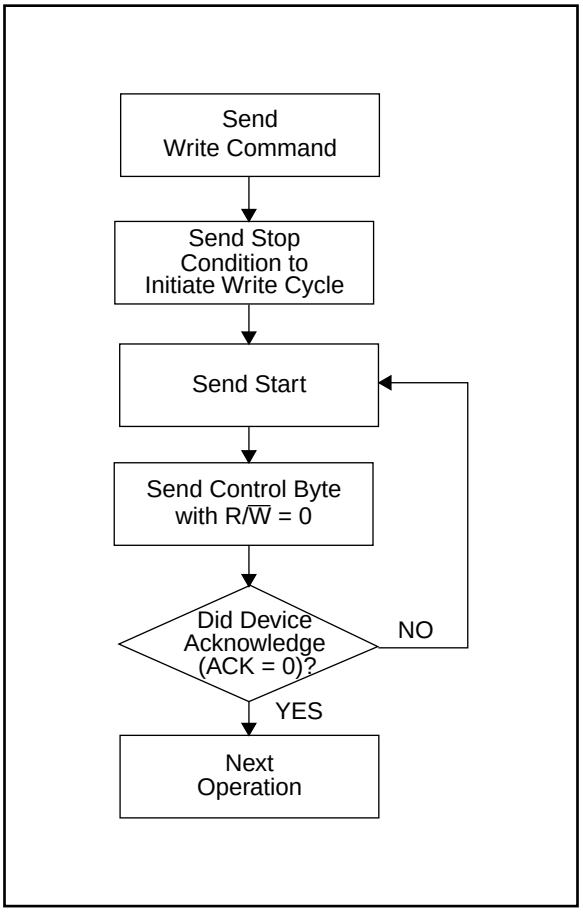

 © 1998 Microchip Technology Inc.

8.0 READ OPERATION

Read operations are initiated in the same way as write operations with the exception that the R/$\overline{W}$ bit of the control byte is set to one. There are three basic types of read operations: current address read, random read, and sequential read.

8.1 Current Address Read

The 24XX128 contains an address counter that maintains the address of the last word accessed, internally incremented by one. Therefore, if the previous read access was to address n (n is any legal address), the next current address read operation would access data from address n + 1.

Upon receipt of the control byte with R/$\overline{W}$ bit set to one, the 24XX128 issues an acknowledge and transmits the 8-bit data word. The master will not acknowledge the transfer but does generate a stop condition and the 24XX128 discontinues transmission (Figure 8-1).

FIGURE 8-1: CURRENT ADDRESS READ

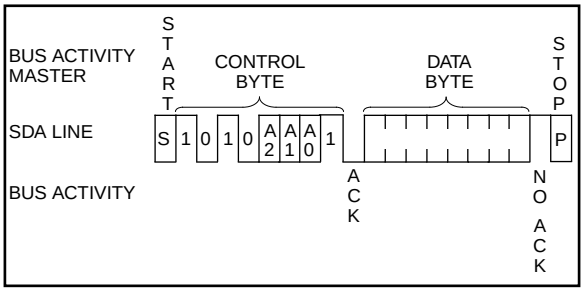

8.2 Random Read

Random read operations allow the master to access any memory location in a random manner. To perform this type of read operation, first the word address must be set. This is done by sending the word address to the 24XX128 as part of a write operation (R/$\overline{W}$ bit set to 0). After the word address is sent, the master generates a start condition following the acknowledge. This terminates the write operation, but not before the internal address pointer is set. Then, the master issues the control byte again but with the R/$\overline{W}$ bit set to a one. The 24XX128 will then issue an acknowledge and transmit the 8-bit data word. The master will not acknowledge the transfer but does generate a stop condition which causes the 24XX128 to discontinue transmission (Figure 8-2). After a random read command, the internal address counter will point to the address location following the one that was just read.

8.3 Sequential Read

Sequential reads are initiated in the same way as a random read except that after the 24XX128 transmits the first data byte, the master issues an acknowledge as opposed to the stop condition used in a random read. This acknowledge directs the 24XX128 to transmit the next sequentially addressed 8-bit word (Figure 8-3). Following the final byte transmitted to the master, the master will NOT generate an acknowledge but will generate a stop condition. To provide sequential reads, the 24XX128 contains an internal address pointer which is incremented by one at the completion of each operation. This address pointer allows the entire memory contents to be serially read during one operation. The internal address pointer will automatically roll over from address 3FFF to address 0000 if the master acknowledges the byte received from the array address 3FFF.

FIGURE 8-2: RANDOM READ

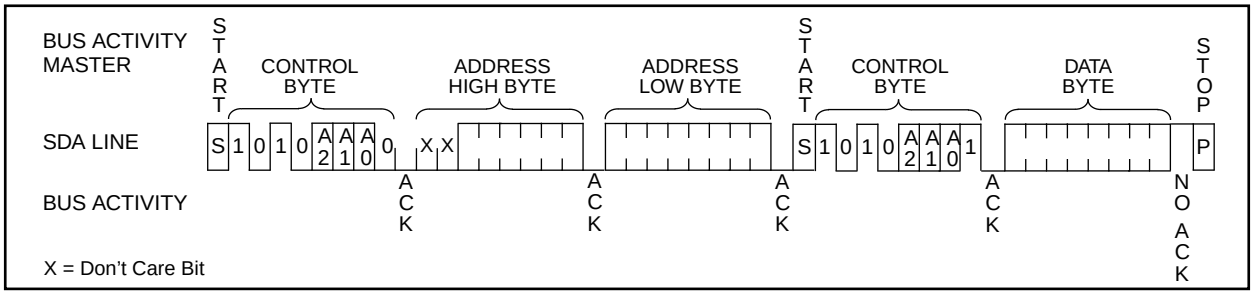

FIGURE 8-3: SEQUENTIAL READ

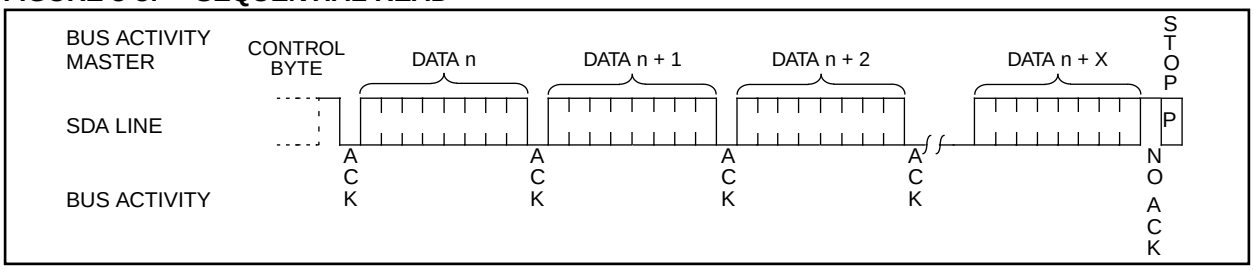

NOTES:

 © 1998 Microchip Technology Inc.

24XX128 PRODUCT IDENTIFICATION SYSTEM

To order or obtain information, e.g., on pricing or delivery, refer to the factory or the listed sales office.

24AA128/24LC128/24FC128 —

Package:

P	=	Plastic DIP (300 mil Body), 8-lead
SN	=	Plastic SOIC (150 mil Body)
ST	=	TSSOP, 8-lead
OT	=	SOT-23, 5 lead

Temperature Range:

Blank	=	0˚C to +70˚C
I	=	–40˚C to +85˚C
E	=	–40˚C to +125˚C

Device:

24AA128	128 bit 1.8V I^2C Serial EEPROM
24AA128T	128 bit 1.8V K I^2C Serial EEPROM (Tape and Reel)
24LC128	128 bit 2.5V I^2C Serial EEPROM
24LC128T	128 bit 2.5V K I^2C Serial EEPROM (Tape and Reel)
24FC128	128 bit 1MHz I^2C Serial EEPROM
24FC128T	128 bit 1MHz I^2C Serial EEPROM (Tape and Reel)

Sales and Support

Data Sheets

Products supported by a preliminary Data Sheet may have an errata sheet describing minor operational differences and recommended workarounds. To determine if an errata sheet exists for a particular device, please contact one of the following:

1. Your local Microchip sales office
2. The Microchip Corporate Literature Center U.S. FAX: (602) 786-7277
3. The Microchip's Bulletin Board, via your local CompuServe number (CompuServe membership NOT required).

Please specify which device, revision of silicon and Data Sheet (include Literature #) you are using.

WORLDWIDE SALES AND SERVICE

AMERICAS

Corporate Office
Microchip Technology Inc.
2355 West Chandler Blvd.
Chandler, AZ 85224-6199
Tel: 602-786-7200 Fax: 602-786-7277
Technical Support: 602 786-7627
Web: http://www.microchip.com

Atlanta
Microchip Technology Inc.
500 Sugar Mill Road, Suite 200B
Atlanta, GA 30350
Tel: 770-640-0034 Fax: 770-640-0307

Boston
Microchip Technology Inc.
5 Mount Royal Avenue
Marlborough, MA 01752
Tel: 508-480-9990 Fax: 508-480-8575

Chicago
Microchip Technology Inc.
333 Pierce Road, Suite 180
Itasca, IL 60143
Tel: 630-285-0071 Fax: 630-285-0075

Dallas
Microchip Technology Inc.
14651 Dallas Parkway, Suite 816
Dallas, TX 75240-8809
Tel: 972-991-7177 Fax: 972-991-8588

Dayton
Microchip Technology Inc.
Two Prestige Place, Suite 150
Miamisburg, OH 45342
Tel: 937-291-1654 Fax: 937-291-9175

Detroit
Microchip Technology Inc.
42705 Grand River, Suite 201
Novi, MI 48375-1727
Tel: 248-374-1888 Fax: 248-374-2874

Los Angeles
Microchip Technology Inc.
18201 Von Karman, Suite 1090
Irvine, CA 92612
Tel: 714-263-1888 Fax: 714-263-1338

New York
Microchip Technology Inc.
150 Motor Parkway, Suite 202
Hauppauge, NY 11788
Tel: 516-273-5305 Fax: 516-273-5335

San Jose
Microchip Technology Inc.
2107 North First Street, Suite 590
San Jose, CA 95131
Tel: 408-436-7950 Fax: 408-436-7955

AMERICAS (continued)

Toronto
Microchip Technology Inc.
5925 Airport Road, Suite 200
Mississauga, Ontario L4V 1W1, Canada
Tel: 905-405-6279 Fax: 905-405-6253

ASIA/PACIFIC

Hong Kong
Microchip Asia Pacific
RM 3801B, Tower Two
Metroplaza
223 Hing Fong Road
Kwai Fong, N.T., Hong Kong
Tel: 852-2-401-1200 Fax: 852-2-401-3431

India
Microchip Technology Inc.
India Liaison Office
No. 6, Legacy, Convent Road
Bangalore 560 025, India
Tel: 91-80-229-0061 Fax: 91-80-229-0062

Japan
Microchip Technology Intl. Inc.
Benex S-1 6F
3-18-20, Shinyokohama
Kohoku-Ku, Yokohama-shi
Kanagawa 222-0033 Japan
Tel: 81-45-471- 6166 Fax: 81-45-471-6122

Korea
Microchip Technology Korea
168-1, Youngbo Bldg. 3 Floor
Samsung-Dong, Kangnam-Ku
Seoul, Korea
Tel: 82-2-554-7200 Fax: 82-2-558-5934

Shanghai
Microchip Technology
RM 406 Shanghai Golden Bridge Bldg.
2077 Yan'an Road West, Hong Qiao District
Shanghai, PRC 200335
Tel: 86-21-6275-5700 Fax: 86 21-6275-5060

ASIA/PACIFIC (continued)

Singapore
Microchip Technology Singapore Pte Ltd.
200 Middle Road
#07-02 Prime Centre
Singapore 188980
Tel: 65-334-8870 Fax: 65-334-8850

Taiwan, R.O.C
Microchip Technology Taiwan
10F-1C 207
Tung Hua North Road
Taipei, Taiwan, ROC
Tel: 886-2-2717-7175 Fax: 886-2-2545-0139

EUROPE

United Kingdom
Arizona Microchip Technology Ltd.
505 Eskdale Road
Winnersh Triangle
Wokingham
Berkshire, England RG41 5TU
Tel: 44-1189-21-5858 Fax: 44-1189-21-5835

France
Arizona Microchip Technology SARL
Zone Industrielle de la Bonde
2 Rue du Buisson aux Fraises
91300 Massy, France
Tel: 33-1-69-53-63-20 Fax: 33-1-69-30-90-79

Germany
Arizona Microchip Technology GmbH
Gustav-Heinemann-Ring 125
D-81739 Müchen, Germany
Tel: 49-89-627-144 0 Fax: 49-89-627-144-44

Italy
Arizona Microchip Technology SRL
Centro Direzionale Colleoni
Palazzo Taurus 1 V. Le Colleoni 1
20041 Agrate Brianza
Milan, Italy
Tel: 39-39-6899939 Fax: 39-39-6899883

7/7/98

DNV Certification, Inc. USA
ACCREDITED REGISTRAR ANSI·RAB
DNV
DNV MSC The Netherlands Accredited by the RvA
ISO 9001 REGISTERED FIRM

Microchip received ISO 9001 Quality System certification for its worldwide headquarters, design, and wafer fabrication facilities in January, 1997. Our field-programmable PICmicro™ 8-bit MCUs, Serial EEPROMs, related specialty memory products and development systems conform to the stringent quality standards of the International Standard Organization (ISO).

All rights reserved. © 1998, Microchip Technology Incorporated, USA. 7/98 Printed on recycled paper.

Information contained in this publication regarding device applications and the like is intended for suggestion only and may be superseded by updates. No representation or warranty is given and no liability is assumed by Microchip Technology Incorporated with respect to the accuracy or use of such information, or infringement of patents or other intellectual property rights arising from such use or otherwise. Use of Microchip's products as critical components in life support systems is not authorized except with express written approval by Microchip. No licenses are conveyed, implicitly or otherwise, under any intellectual property rights. The Microchip logo and name are registered trademarks of Microchip Technology Inc. in the U.S.A. and other countries. All rights reserved. All other trademarks mentioned herein are the property of their respective companies.