Outline Table

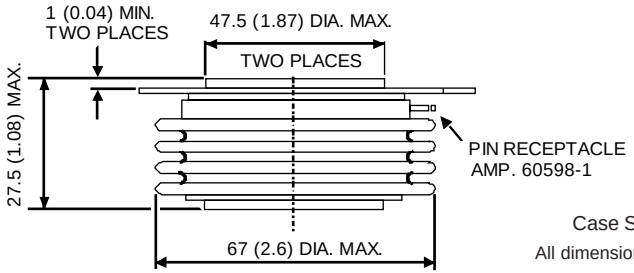

Case Style A-24 (K-PUK)

All dimensions in millimeters (inches)

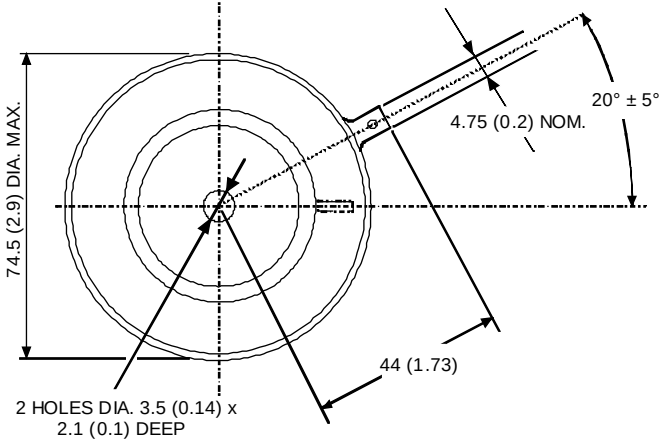

CREPAGE DESTANCE 28.88 (1.137) MIN.
STRIKE DISTANCE 17.99 (0.708) MIN.