Outlines Table

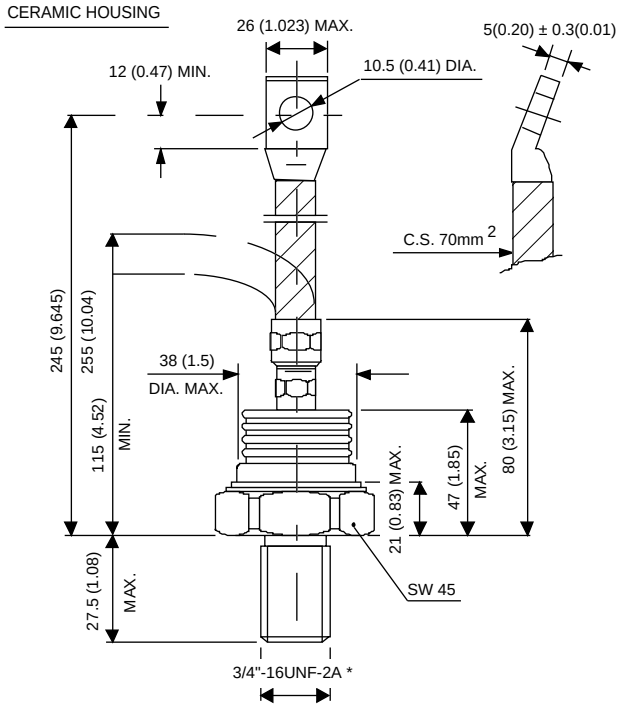

Case Style B-8
All dimensions in millimeters (inches)

* FOR METRIC DEVICE: M24 x 1.5 - LENGHT SCREW 21 (0.83) MAX.

Case Style B-8 with top thread terminal 3/8"
All dimensions in millimeters (inches)

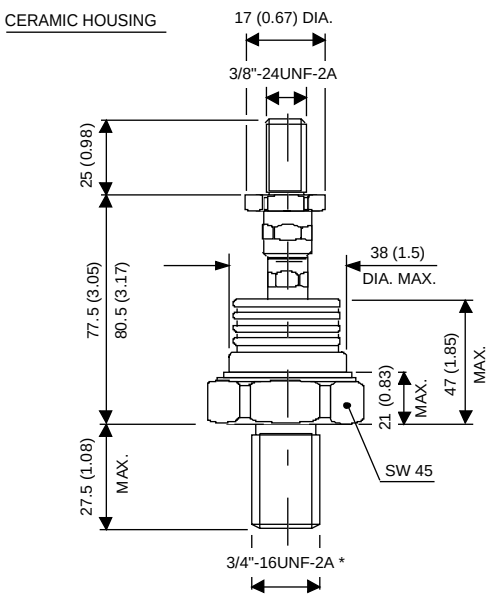

* FOR METRIC DEVICE: M24 x 1.5 - LENGHT SCREW 21 (0.83) MAX.