Circuit Diagram

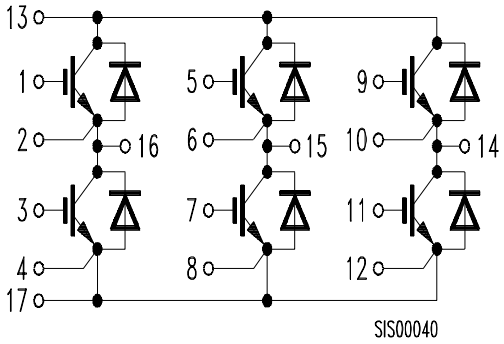

Package Outlines

Dimensions in mm
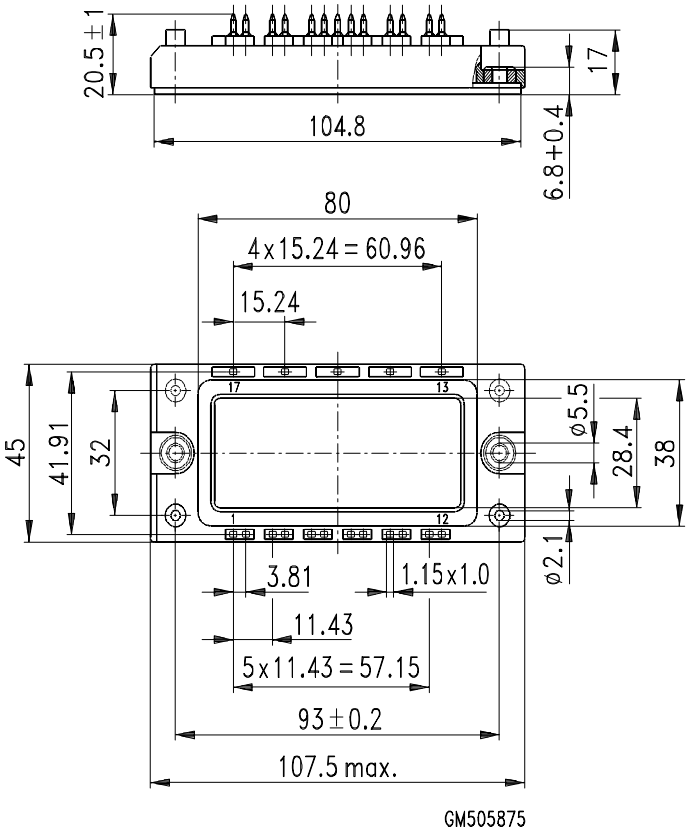
Weight: 180 g