Four Bit Universal Shift Register

MC10141

The MC10141 is a four–bit universal shift register which performs shift left, or shift right, serial/parallel in, and serial/parallel out operations with no external gating. Inputs S1 and S2 control the four possible operations of the register without external gating of the clock. The flip–flops shift information on the positive edge of the clock. The four operations are stop shift, shift left, shift right, and parallel entry of data. The other six inputs are all data type inputs; four for parallel entry data, and one for shifting in from the left (DL) and one for shifting in from the right (DR).

P_D = 425 mW typ/pkg (No Load)
f_{Shift} = 200 MHz typ
t_r, t_f = 2.0 ns typ (20%–80%)

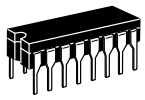

L SUFFIX
CERAMIC PACKAGE
CASE 620–10

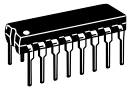

P SUFFIX
PLASTIC PACKAGE
CASE 648–08

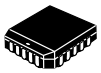

FN SUFFIX
PLCC
CASE 775–02

LOGIC DIAGRAM

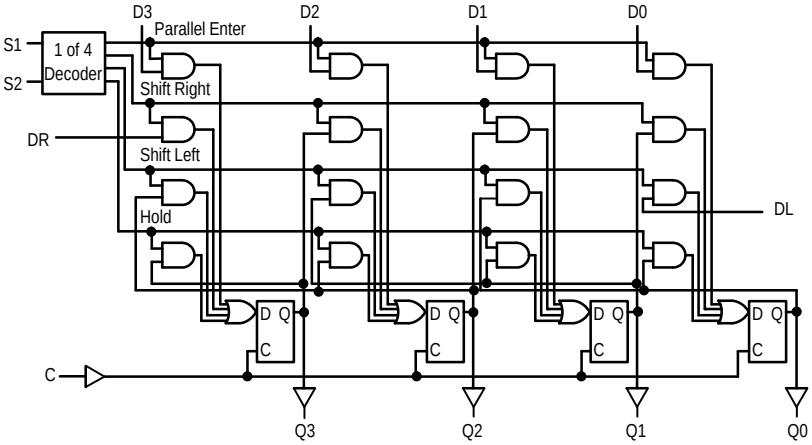

V_{CC1} = PIN 1
V_{CC2} = PIN 16
V_{EE} = PIN 8

DIP
PIN ASSIGNMENT

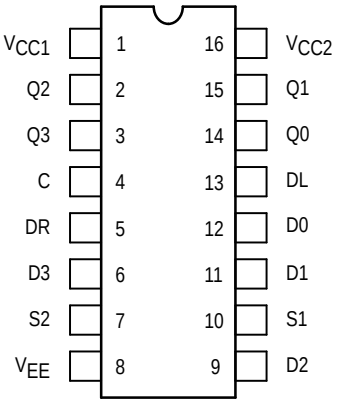

Pin assignment is for Dual–in–Line Package.
For PLCC pin assignment, see the Pin Conversion Tables on page 6–11 of the Motorola MECL Data Book (DL122/D).

TRUTH TABLE

SELECT			OUTPUTS			
S1	S2	OPERATING MODE	$Q0_{n+1}$	$Q1_{n+1}$	$Q2_{n+1}$	$Q3_{n+1}$
L	L	Parallel Entry	D0	D1	D2	D3
L	H	Shift Right*	$Q1_n$	$Q2_n$	$Q3_n$	DR
H	L	Shift Left*	DL	$Q0_n$	$Q1_n$	$Q2_n$
H	H	Stop Shift	$Q0_n$	$Q1_n$	$Q2_n$	$Q3_n$

*Outputs as exist after pulse appears at “C” input with input conditions as shown. (Pulse = Positive transition of clock input).

SHIFT FREQUENCY TEST CIRCUIT

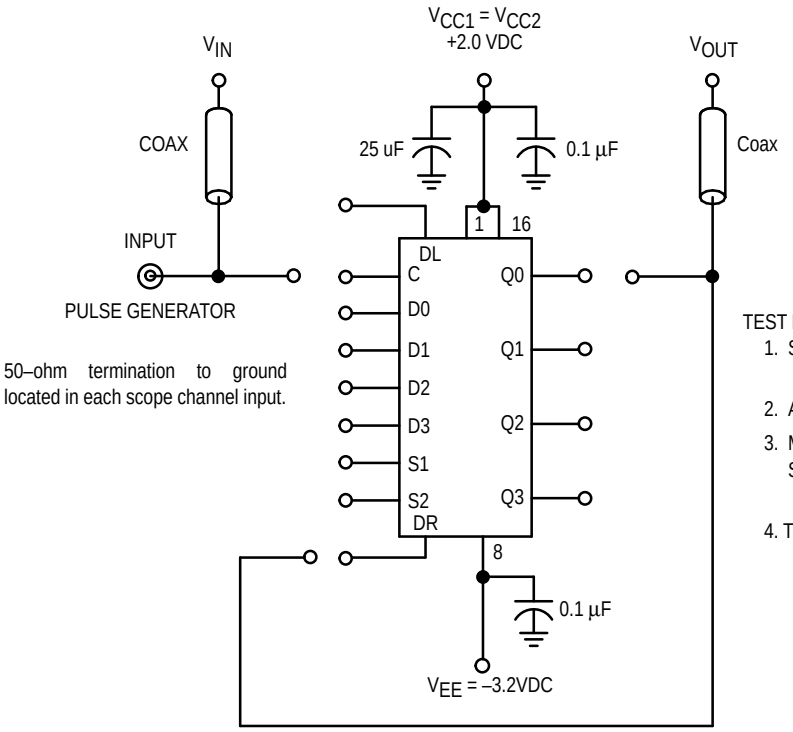

All input and output cables to the scope are equal lengths of 50–ohm coaxial cable. Wire length should be < 1/4 inch from TP_{in} to input pin and TP_{out} to output pin.

50–ohm termination to ground located in each scope channel input.

TEST PROCEDURES:

1. SET D1, D2, D3 = +0.31 VDC (LOGIC L)
   D0 = +1.11 VDC (LOGIC H)
2. APPY CLOCK PULSE V_{IH} / V_{IL} TO SET Q0 HIGH.
3. MAINTAIN CLOCK LOW.
   SET S1 = +0.31 VDC (LOGIC L)
   S2 = +1.11 VDC (LOGIC H)
4. TEST SHIFT FREQUENCY

ELECTRICAL CHARACTERISTICS

Characteristic	Symbol	Pin Under Test	Test Limits –30°C Min	–30°C Max	+25°C Min	+25°C Typ	+25°C Max	+85°C Min	+85°C Max	Unit
Power Supply Drain Current	I_E	8		112		82	102		112	mAdc
Input Current	I_{inH}	5 6 7 4		350 350 390 425			220 220 245 265		220 220 245 265	µAdc
	I_{inL}	12	0.5		0.5			0.3		µAdc
Output Voltage Logic 1	V_{OH}	3	–1.060	–0.890	–0.960		–0.810	–0.890	–0.700	Vdc
Output Voltage Logic 0	V_{OL}	3	–1.890	–1.675	–1.850		–1.650	–1.825	–1.615	Vdc
Threshold Voltage Logic 1	V_{OHA} (Note 1.)	3 3 3 3	–1.080 –1.080 –1.080 –1.080		–0.980 –0.980 –0.980 –0.980			–0.910 –0.910 –0.910 –0.910		Vdc
Threshold Voltage Logic 0	V_{OLA} (Note 1.)	3 3 3 3		–1.655 –1.655 –1.655 –1.655			–1.630 –1.630 –1.630 –1.630		–1.595 –1.595 –1.595 –1.595	Vdc
Switching Times (50Ω Load)										ns
Propagation Delay	t_{4+3+}	3	1.7	3.9	1.8	2.9	3.8	2.0	4.2	
Setup TIme (t_{setup})	t_{12+4+} t_{10+4+}	14 14	2.5 5.5		2.5 5.0			2.5 5.5		
Hold Time (t_{hold})	t_{4+12+}	14	1.5		1.5			1.5		
Rise Time (20 to 80%)	t_{3+}	3	1.0	3.4	1.1	2.0	3.3	1.1	3.6	
Fall Time (20 to 80%)	t_{3-}	3	1.0	3.4	1.1	2.0	3.3	1.1	3.6	
Shift Frequency	f_{shift}		150		150	200		150		MHz

1. These tests to be performed in sequence as shown.

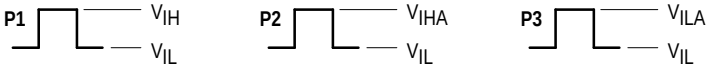

2. See shift frequency test circuit for test procedures.
3. Reset to zero before performing test.
4. Reset to one before performing test.

ELECTRICAL CHARACTERISTICS (continued)

@ Test Temperature	V_{IHmax}	V_{ILmin}	V_{IHAmin}	V_{ILAmax}	V_{EE}
–30°C	–0.890	–1.890	–1.205	–1.500	–5.2
+25°C	–0.810	–1.850	–1.105	–1.475	–5.2
+85°C	–0.700	–1.825	–1.035	–1.440	–5.2

Characteristic	Symbol	Pin Under Test	TEST VOLTAGE APPLIED TO PINS LISTED BELOW V_{IHmax}	V_{ILmin}	V_{IHAmin}	V_{ILAmax}	V_{EE}	P1	P2	P3	(V_{CC}) Gnd
Power Supply Drain Current	I_E	8					8				1, 16
Input Current	I_{inH}	5	5				8				1, 16
		6	6				8				1, 16
		7	7				8				1, 16
		4	4				8				1, 16
	I_{inL}	12	4,5,6,7,9, 10,11,13	12			8				1, 16
Output Voltage Logic 1	V_{OH}	3	6				8	4			1, 16
Output Voltage Logic 0	V_{OL}	3					8	4			1, 16
Threshold Voltage Logic 1	V_{OHA} (Note 1.)	3			6		8	4			1, 16
		3	6	Note 3.		7	8	4			1, 16
		3	6	Note 3.			8		4		1, 16
		3					8			4	1, 16
Threshold Voltage Logic 0	V_{OLA} (Note 1.)	3				6	8	4			1, 16
		3		Note 4.		7	8	4			1, 16
		3		Note 4.			8		4		1, 16
		3	6				8			4	1, 16
Switching Times (50Ω Load)							**–3.2 V**				**+2.0 V**
Propagation Delay	t_{4+3+}	3					8				1, 16
Setup TIme (t_{setup})	t_{12+4+}	14					8				1, 16
	t_{10+4+}	14					8				1, 16
Hold Time (t_{hold})	t_{4+12+}	14					8				1, 16
Rise Time (20 to 80%)	t_{3+}	3					8				1, 16
Fall Time (20 to 80%)	t_{3-}	3					8				1, 16
Shift Frequency	f_{shift}		Note 2.				8				1, 16

1. These tests to be performed in sequence as shown.

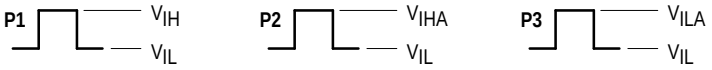

2. See shift frequency test circuit for test procedures.
3. Reset to zero before performing test.
4. Reset to one before performing test.

Each MECL 10,000 series circuit has been designed to meet the dc specifications shown in the test table, after thermal equilibrium has been established. The circuit is in a test socket or mounted on a printed circuit board and transverse air flow greater than 500 linear fpm is maintained. Outputs are terminated through a 50–ohm resistor to –2.0 volts. Test procedures are shown for only one gate. The other gates are tested in the same manner.

OUTLINE DIMENSIONS

FN SUFFIX
PLASTIC PLCC PACKAGE
CASE 775–02
ISSUE C

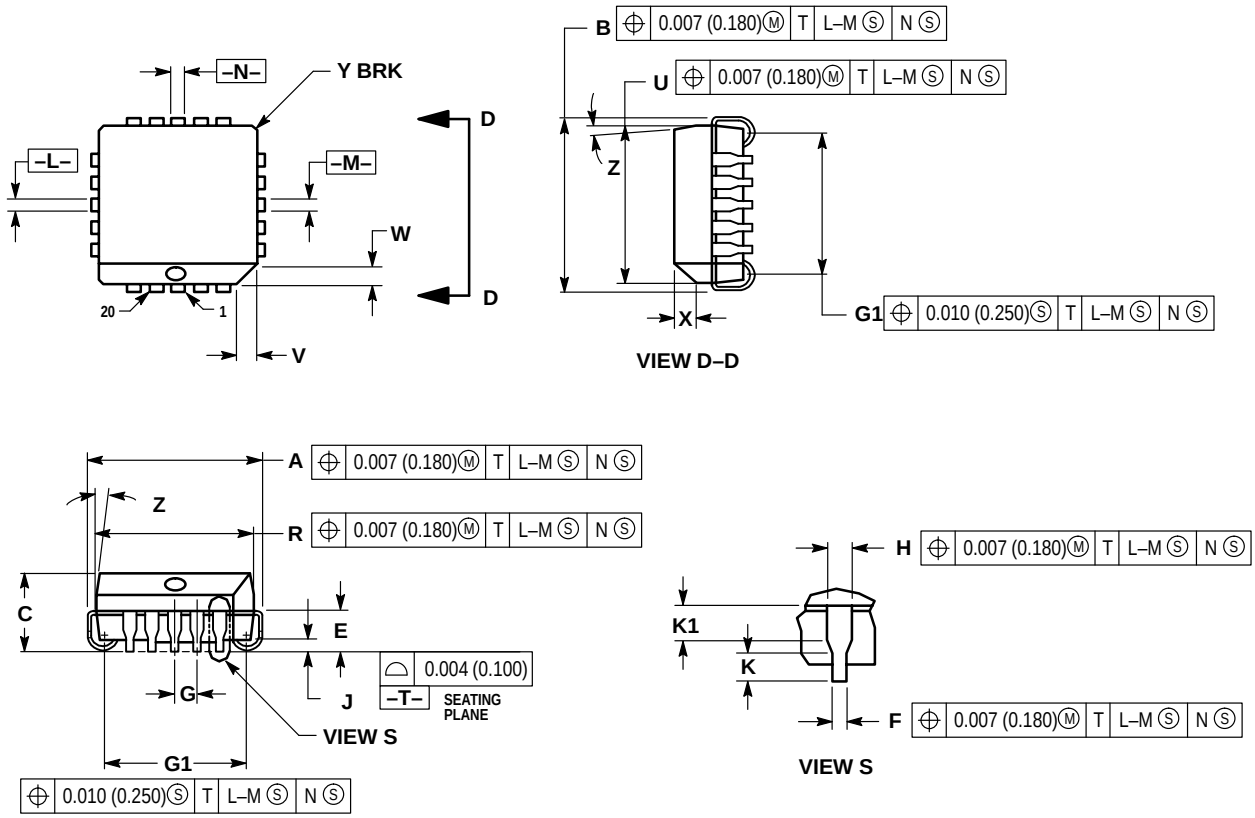

NOTES:
1. DATUMS –L–, –M–, AND –N– DETERMINED WHERE TOP OF LEAD SHOULDER EXITS PLASTIC BODY AT MOLD PARTING LINE.
2. DIMENSION G1, TRUE POSITION TO BE MEASURED AT DATUM –T–, SEATING PLANE.
3. DIMENSIONS R AND U DO NOT INCLUDE MOLD FLASH. ALLOWABLE MOLD FLASH IS 0.010 (0.250) PER SIDE.
4. DIMENSIONING AND TOLERANCING PER ANSI Y14.5M, 1982.
5. CONTROLLING DIMENSION: INCH.
6. THE PACKAGE TOP MAY BE SMALLER THAN THE PACKAGE BOTTOM BY UP TO 0.012 (0.300). DIMENSIONS R AND U ARE DETERMINED AT THE OUTERMOST EXTREMES OF THE PLASTIC BODY EXCLUSIVE OF MOLD FLASH, TIE BAR BURRS, GATE BURRS AND INTERLEAD FLASH, BUT INCLUDING ANY MISMATCH BETWEEN THE TOP AND BOTTOM OF THE PLASTIC BODY.
7. DIMENSION H DOES NOT INCLUDE DAMBAR PROTRUSION OR INTRUSION. THE DAMBAR PROTRUSION(S) SHALL NOT CAUSE THE H DIMENSION TO BE GREATER THAN 0.037 (0.940). THE DAMBAR INTRUSION(S) SHALL NOT CAUSE THE H DIMENSION TO BE SMALLER THAN 0.025 (0.635).

	INCHES		MILLIMETERS	
DIM	MIN	MAX	MIN	MAX
A	0.385	0.395	9.78	10.03
B	0.385	0.395	9.78	10.03
C	0.165	0.180	4.20	4.57
E	0.090	0.110	2.29	2.79
F	0.013	0.019	0.33	0.48
G	0.050 BSC		1.27 BSC	
H	0.026	0.032	0.66	0.81
J	0.020	—	0.51	—
K	0.025	—	0.64	—
R	0.350	0.356	8.89	9.04
U	0.350	0.356	8.89	9.04
V	0.042	0.048	1.07	1.21
W	0.042	0.048	1.07	1.21
X	0.042	0.056	1.07	1.42
Y	—	0.020	—	0.50
Z	2°	10°	2°	10°
G1	0.310	0.330	7.88	8.38
K1	0.040	—	1.02	—

OUTLINE DIMENSIONS

L SUFFIX
CERAMIC DIP PACKAGE
CASE 620–10
ISSUE V

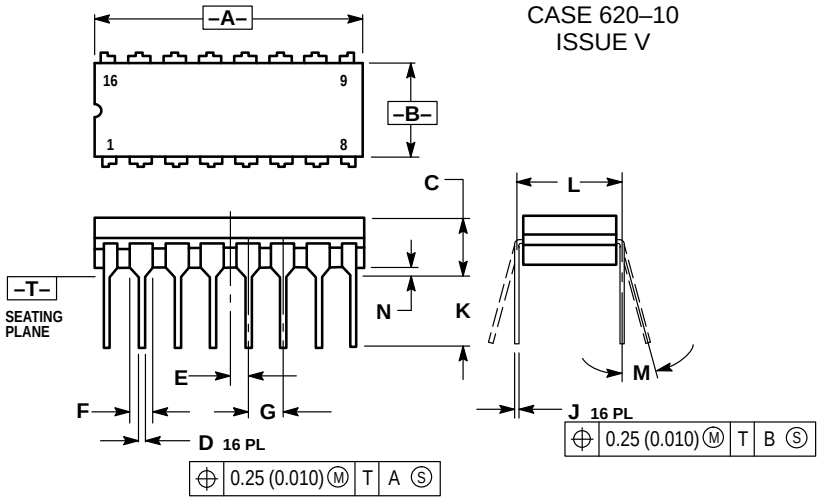

NOTES:
1. DIMENSIONING AND TOLERANCING PER ANSI Y14.5M, 1982.
2. CONTROLLING DIMENSION: INCH.
3. DIMENSION L TO CENTER OF LEAD WHEN FORMED PARALLEL.
4. DIMENSION F MAY NARROW TO 0.76 (0.030) WHERE THE LEAD ENTERS THE CERAMIC BODY.

	INCHES		MILLIMETERS	
DIM	MIN	MAX	MIN	MAX
A	0.750	0.785	19.05	19.93
B	0.240	0.295	6.10	7.49
C	—	0.200	—	5.08
D	0.015	0.020	0.39	0.50
E	0.050 BSC		1.27 BSC	
F	0.055	0.065	1.40	1.65
G	0.100 BSC		2.54 BSC	
H	0.008	0.015	0.21	0.38
K	0.125	0.170	3.18	4.31
L	0.300 BSC		7.62 BSC	
M	0°	15°	0°	15°
N	0.020	0.040	0.51	1.01

P SUFFIX
PLASTIC DIP PACKAGE
CASE 648–08
ISSUE R

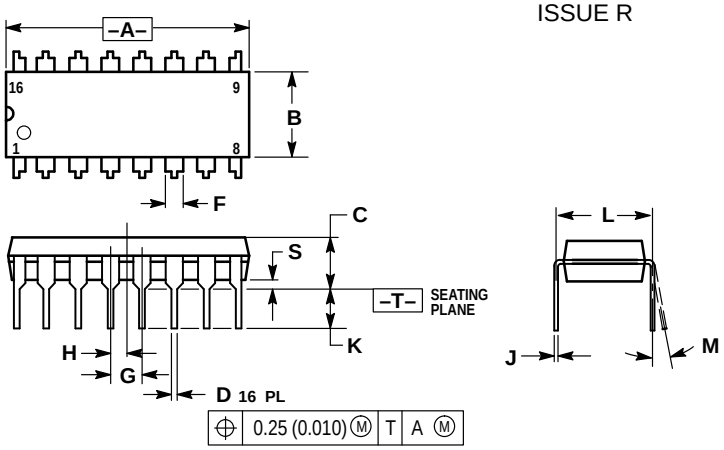

NOTES:
1. DIMENSIONING AND TOLERANCING PER ANSI Y14.5M, 1982.
2. CONTROLLING DIMENSION: INCH.
3. DIMENSION L TO CENTER OF LEADS WHEN FORMED PARALLEL.
4. DIMENSION B DOES NOT INCLUDE MOLD FLASH.
5. ROUNDED CORNERS OPTIONAL.

	INCHES		MILLIMETERS	
DIM	MIN	MAX	MIN	MAX
A	0.740	0.770	18.80	19.55
B	0.250	0.270	6.35	6.85
C	0.145	0.175	3.69	4.44
D	0.015	0.021	0.39	0.53
F	0.040	0.70	1.02	1.77
G	0.100 BSC		2.54 BSC	
H	0.050 BSC		1.27 BSC	
J	0.008	0.015	0.21	0.38
K	0.110	0.130	2.80	3.30
L	0.295	0.305	7.50	7.74
M	0°	10°	0°	10°
S	0.020	0.040	0.51	1.01

How to reach us:
USA/EUROPE/Locations Not Listed: Motorola Literature Distribution;
P.O. Box 5405, Denver, Colorado 80217. 303–675–2140 or 1–800–441–2447

Mfax™: RMFAX0@email.sps.mot.com – TOUCHTONE 602–244–6609
INTERNET: http://Design–NET.com

JAPAN: Nippon Motorola Ltd.; Tatsumi–SPD–JLDC, 6F Seibu–Butsuryu–Center, 3–14–2 Tatsumi Koto–Ku, Tokyo 135, Japan. 81–3–3521–8315

ASIA/PACIFIC: Motorola Semiconductors H.K. Ltd.; 8B Tai Ping Industrial Park, 51 Ting Kok Road, Tai Po, N.T., Hong Kong. 852–26629298