C-MOS 2 M (256 × 8)-BIT FIELD BUFFER

—TOP VIEW—

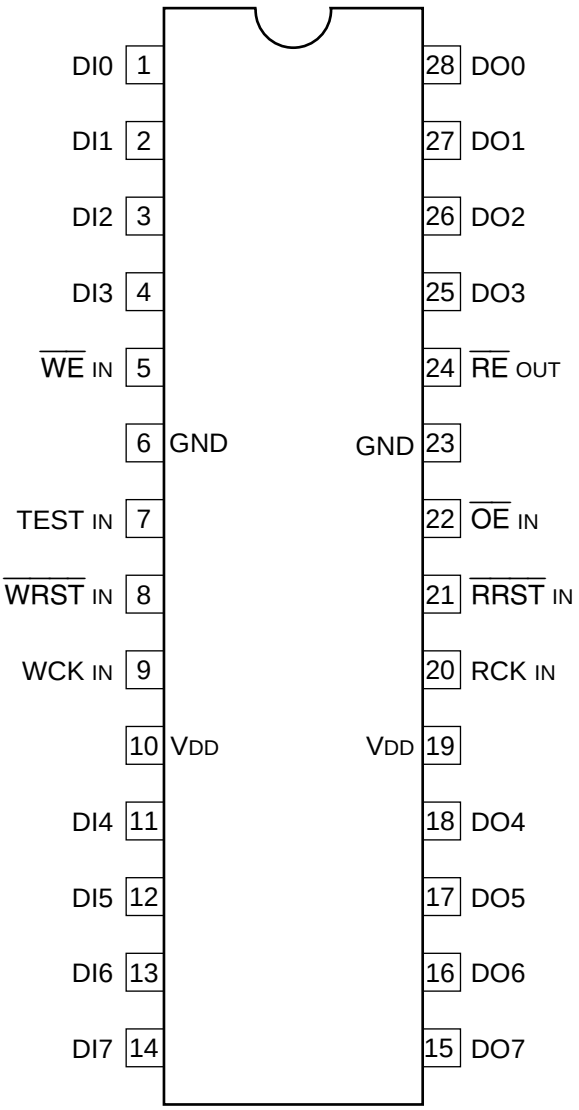

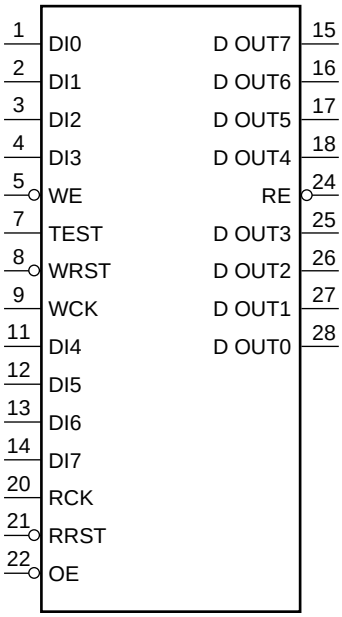

DI0 - 7	:	DATA INPUTS
DO0 - 7	:	DATA OUTPUTS
$\overline{\text{OE}}$	:	OUTPUT ENABLE INPUT
RCK	:	READ CLOCK INPUT
$\overline{\text{RE}}$	:	READ ENABLE OUTPUT
$\overline{\text{RRST}}$	:	READ RESET INPUT
TEST	:	TEST INPUT
WCK	:	WRITE CLOCK INPUT
$\overline{\text{WE}}$	:	WRITE ENABLE INPUT
$\overline{\text{WRST}}$	:	WRITE RESET INPUT

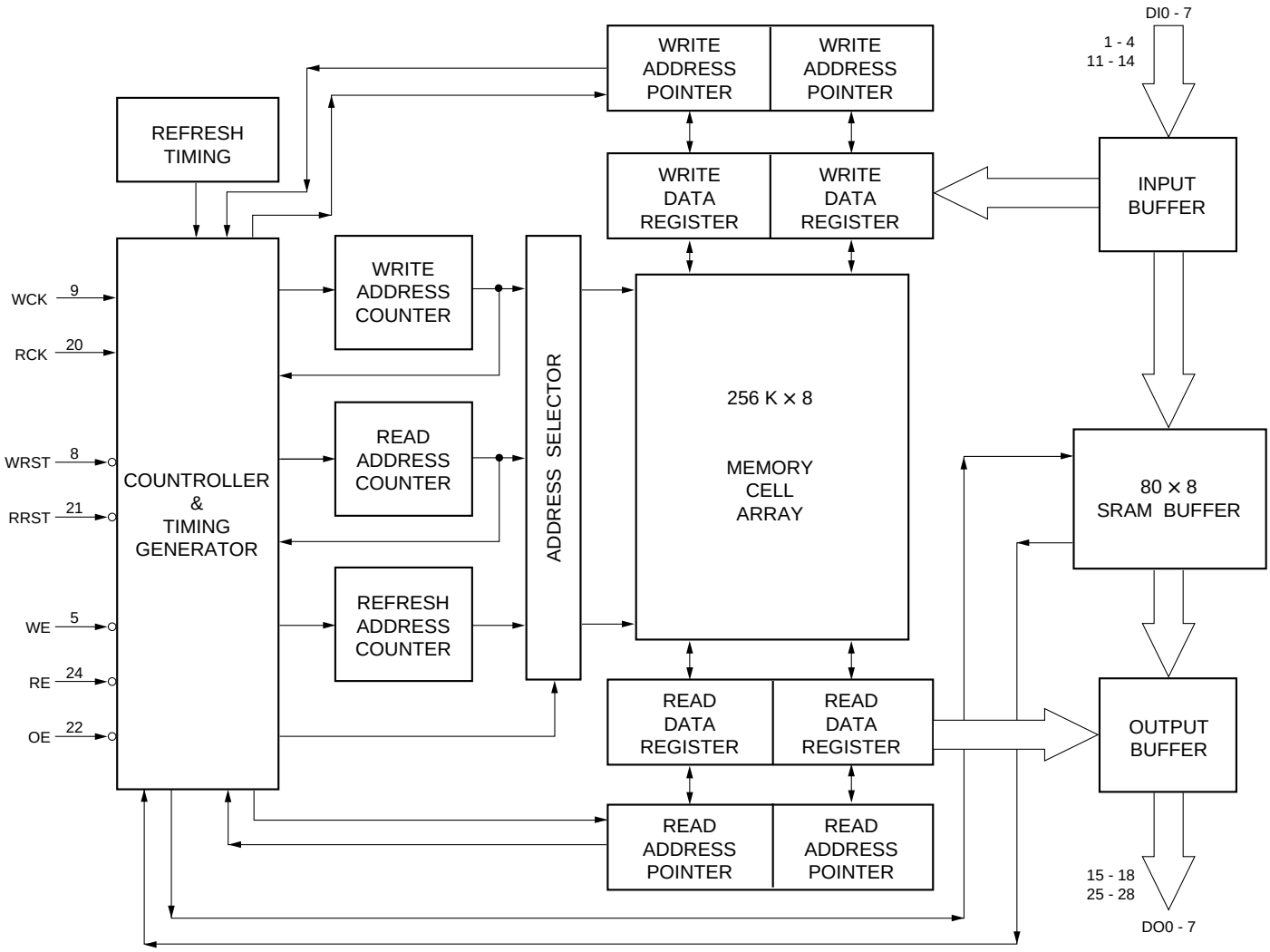
DI0 - 7
1 - 4
11 - 14
WRITE ADDRESS POINTER
WRITE ADDRESS POINTER
REFRESH TIMING
WRITE DATA REGISTER
WRITE DATA REGISTER
INPUT BUFFER
WCK
9
RCK
20
WRST
8
RRST
21
WE
5
RE
24
OE
22
COUNTROLLER & TIMING GENERATOR
WRITE ADDRESS COUNTER
READ ADDRESS COUNTER
REFRESH ADDRESS COUNTER
ADDRESS SELECTOR
256 K × 8
MEMORY CELL ARRAY
80 × 8 SRAM BUFFER
READ DATA REGISTER
READ DATA REGISTER
OUTPUT BUFFER
READ ADDRESS POINTER
READ ADDRESS POINTER
15 - 18
25 - 28
DO0 - 7