* * * * *

C-MOS 16M (1,048,576 x16) BIT DYNAMIC RAM

-TOP VIEW-

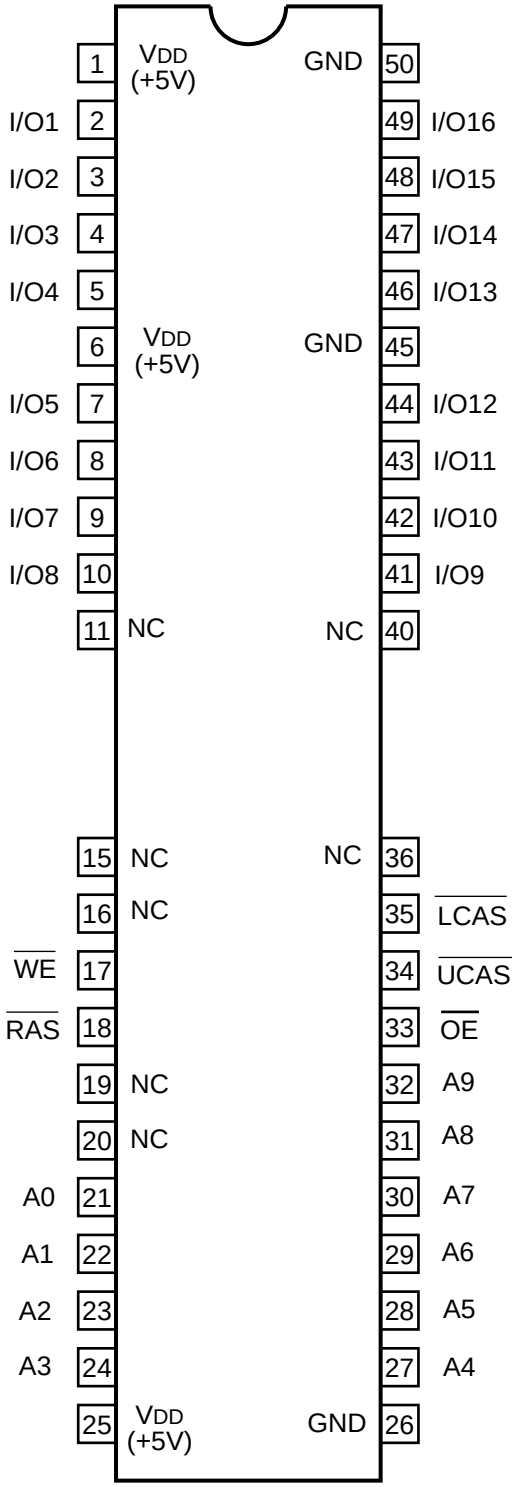

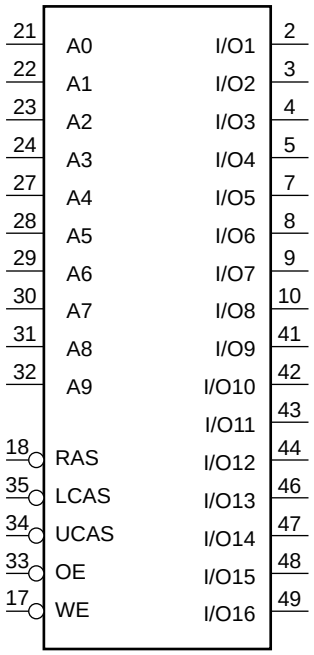

A0 -9 ; ADDRESS INPUTS
I/O1-16 ; DATA INPUTS/OUTPUTS
$\overline{\text{RAS}}$; ROW ADDRESS STROBE INPUT
$\overline{\text{UCAS}}$; COLUMN ADDRESS STROBE (UPPER) INPUT
$\overline{\text{LCAS}}$; COLUMN ADDRESS STROBE (LOWER) INPUT
$\overline{\text{WE}}$; WRITE ENABLE INPUT
$\overline{\text{OE}}$; OUTPUT ENABLE INPUT

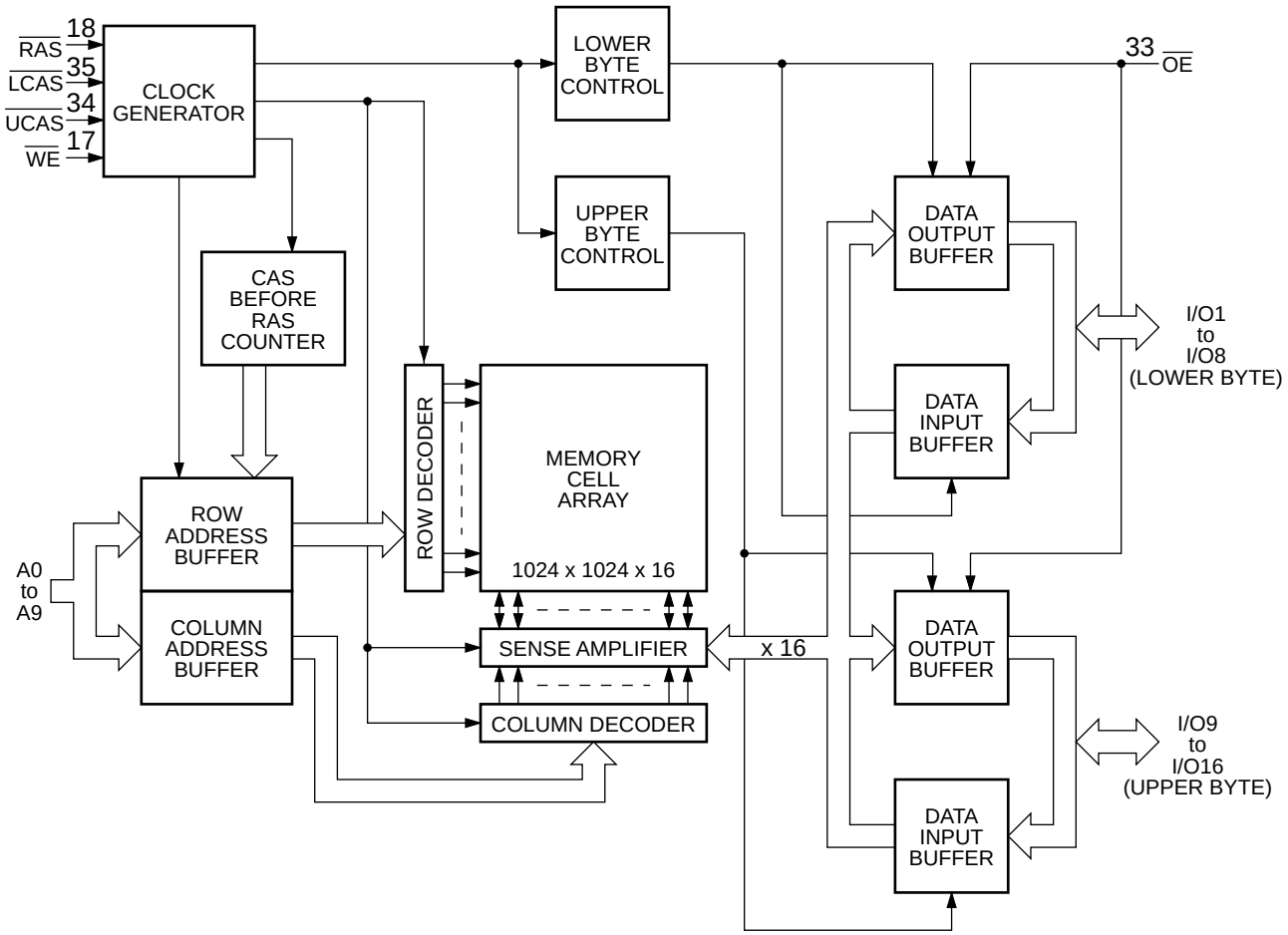
RAS
18
LCAS
35
UCAS
34
WE
17
CLOCK GENERATOR
LOWER BYTE CONTROL
UPPER BYTE CONTROL
33
OE
CAS BEFORE RAS COUNTER
ROW DECODER
MEMORY CELL ARRAY
1024 x 1024 x 16
ROW ADDRESS BUFFER
COLUMN ADDRESS BUFFER
A0 to A9
SENSE AMPLIFIER
x 16
COLUMN DECODER
DATA OUTPUT BUFFER
DATA INPUT BUFFER
I/O1 to I/O8 (LOWER BYTE)
DATA OUTPUT BUFFER
DATA INPUT BUFFER
I/O9 to I/O16 (UPPER BYTE)