HIGH PERFORMANCE CURRENT MODE PWM CONTROLLER
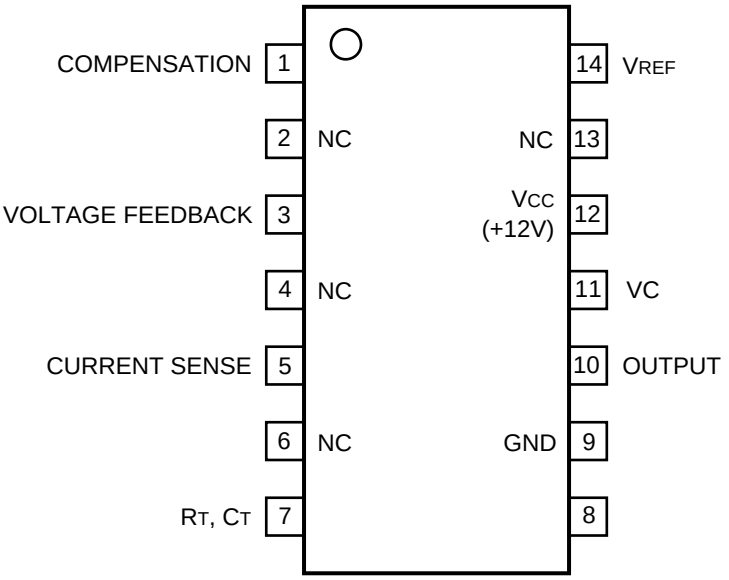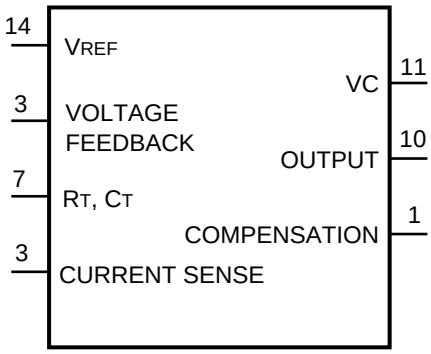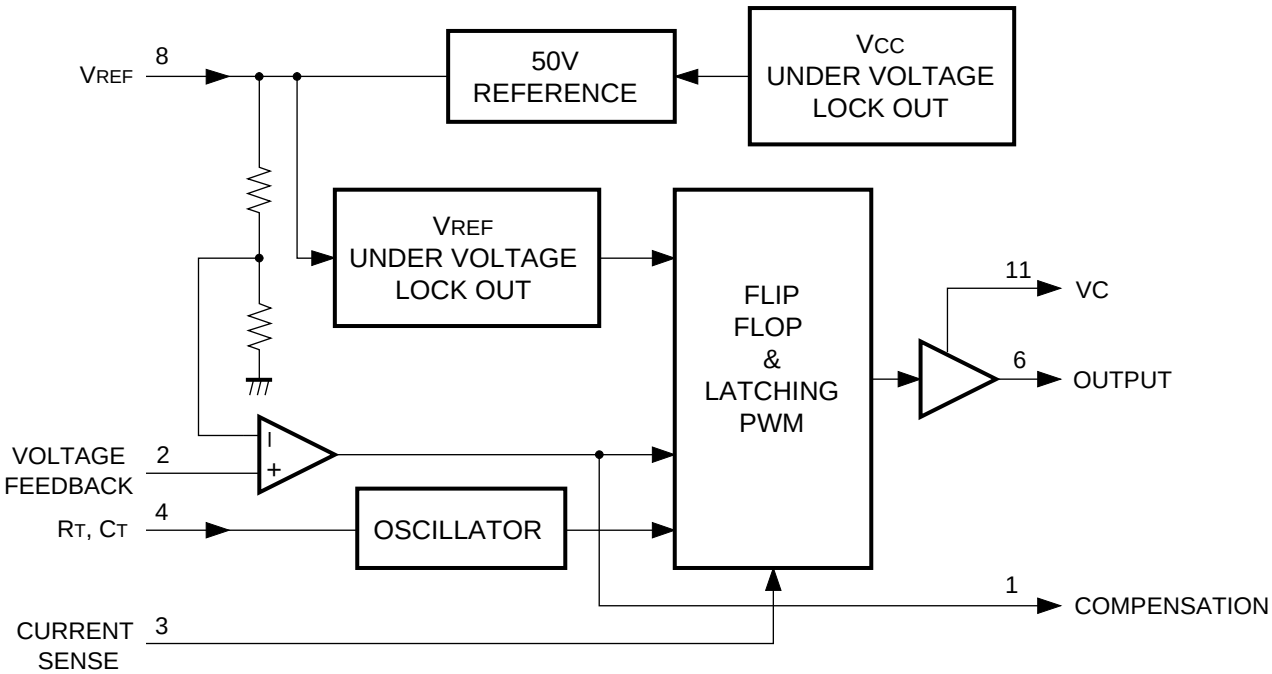
—TOP VIEW—