C-MOS 3-STATE OUTPUTS OCTAL LATCHES

—TOP VIEW—

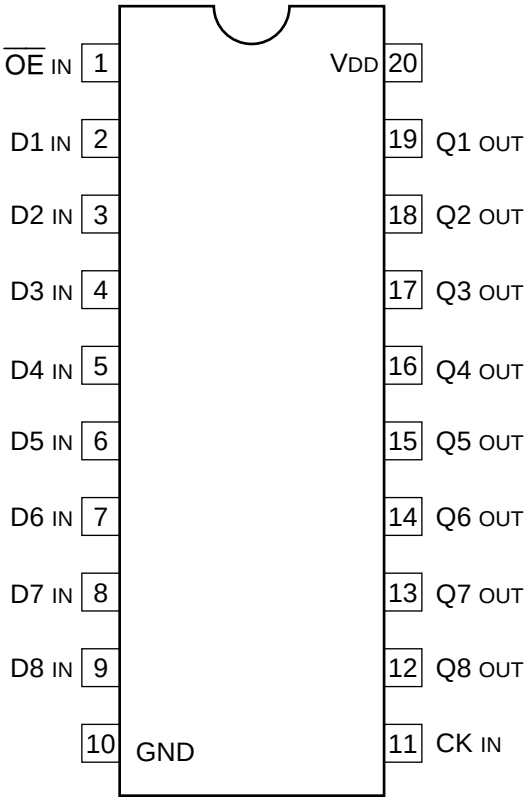

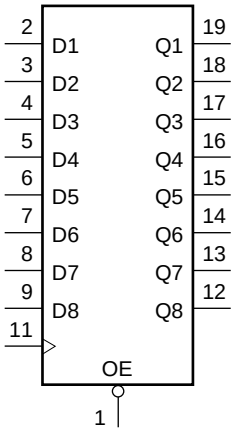

INPUT			OUT
OE	CK	D	Q
0	1	1	1
0	1	0	0
0	0	×	Qo
1	×	×	HI-Z
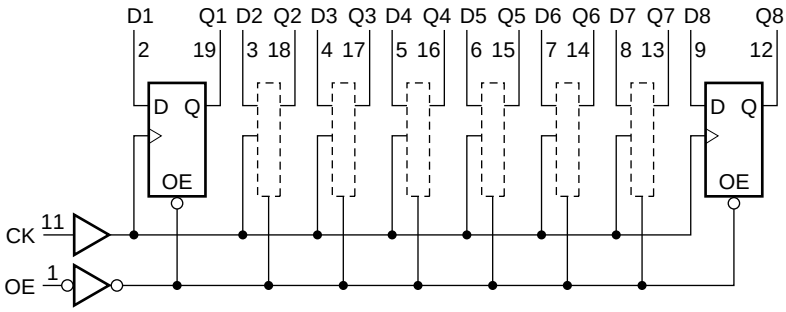
0 : LOW LEVEL
1 : HIGH LEVEL
× : DON'T CARE
HI-Z : HIGH IMPEDANCE
Qo : NO CHANGE