- **Member of the Texas Instruments *Widebus*™ Family**
- ***EPIC*™ (Enhanced-Performance Implanted CMOS) Submicron Process**
- **Bus Hold on Data Inputs Eliminates the Need for External Pullup/Pulldown Resistors**
- **ESD Protection Exceeds 2000 V Per MIL-STD-883, Method 3015; Exceeds 200 V Using Machine Model (C = 200 pF, R = 0)**
- **Latch-Up Performance Exceeds 250 mA Per JESD 17**
- **Packaged in Plastic 300-mil Thin Shrink Small-Outline Package**

DBB PACKAGE
(TOP VIEW)

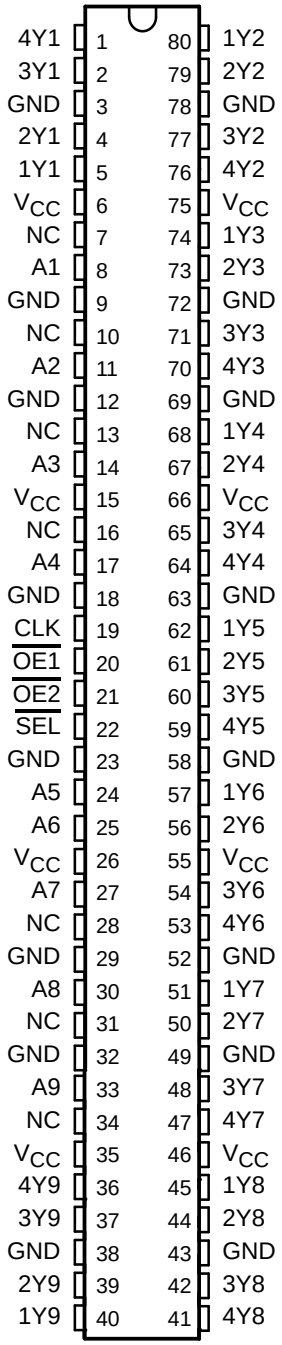

NC – No internal connection

description

This 1-bit to 4-bit address register/driver is designed for 2.3-V to 3.6-V V_{CC} operation. The device is ideal for use in applications where a single address bus is driving four separate memory locations. The SN74ALVCH16831 can be used as a buffer or a register, depending on the logic level of the select ($\overline{SEL}$) input.

When $\overline{SEL}$ is logic high, the device is in the buffer mode. The outputs follow the inputs and are controlled by the two output-enable ($\overline{OE}$) controls. Each $\overline{OE}$ controls two groups of nine outputs.

When $\overline{SEL}$ is logic low, the device is in the register mode. The register is an edge-triggered D-type flip-flop. On the positive transition of the clock (CLK) input, data set up at the A inputs is stored in the internal registers. $\overline{OE}$ controls operate the same as in buffer mode.

When $\overline{OE}$ is logic low, the outputs are in a normal logic state (high or low logic level). When $\overline{OE}$ is logic high, the outputs are in the high-impedance state.

$\overline{SEL}$ and $\overline{OE}$ do not affect the internal operation of the flip-flops. Old data can be retained or new data can be entered while the outputs are in the high-impedance state.

Please be aware that an important notice concerning availability, standard warranty, and use in critical applications of Texas Instruments semiconductor products and disclaimers thereto appears at the end of this data sheet.

EPIC and Widebus are trademarks of Texas Instruments Incorporated.

PRODUCTION DATA information is current as of publication date. Products conform to specifications per the terms of Texas Instruments standard warranty. Production processing does not necessarily include testing of all parameters.

Copyright © 1997, Texas Instruments Incorporated

description (continued)

To ensure the high-impedance state during power up or power down, $\overline{OE}$ should be tied to V_{CC} through a pullup resistor; the minimum value of the resistor is determined by the current-sinking capability of the driver.

Active bus-hold circuitry is provided to hold unused or floating data inputs at a valid logic level.

The SN74ALVCH16831 is characterized for operation from –40°C to 85°C.

FUNCTION TABLE

INPUTS				OUTPUT
$\overline{OE}$	$\overline{SEL}$	CLK	A	Y
H	X	X	X	Z
L	H	X	L	L
L	H	X	H	H
L	L	↑	L	L
L	L	↑	H	H

logic diagram (positive logic)

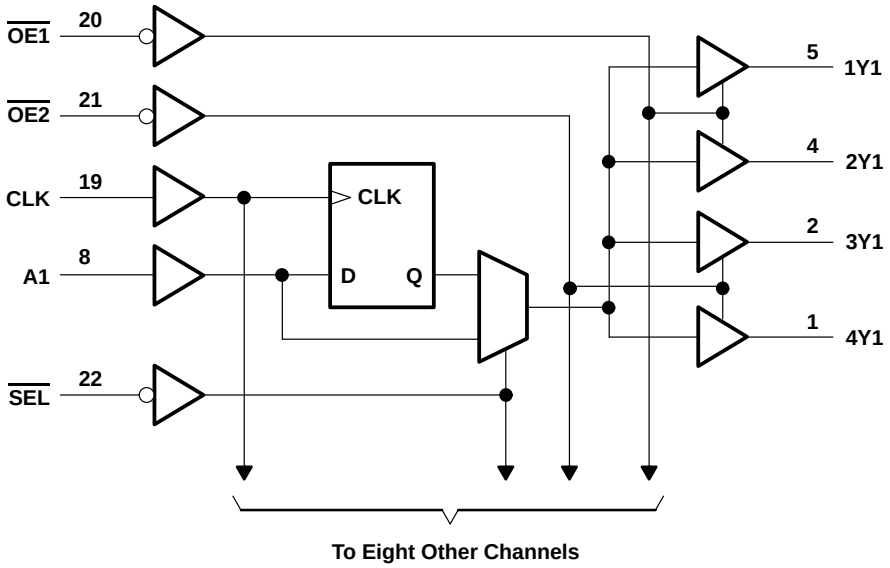

absolute maximum ratings over operating free-air temperature range (unless otherwise noted)†

Supply voltage range, V_{CC} . . . . . –0.5 V to 4.6 V
Input voltage range, V_I (see Note 1) . . . . . –0.5 V to 4.6 V
Output voltage range, V_O (see Notes 1 and 2) . . . . . –0.5 V to V_{CC} + 0.5 V
Input clamp current, I_{IK} (V_I < 0) . . . . . –50 mA
Output clamp current, I_{OK} (V_O < 0 or V_O > V_{CC}) . . . . . ±50 mA
Continuous output current, I_O (V_O = 0 to V_{CC}) . . . . . ±50 mA
Continuous current through each V_{CC} or GND . . . . . ±100 mA
Package thermal impedance, θ_{JA} (see Note 3) . . . . . 106°C/W
Storage temperature range, T_{stg} . . . . . –65°C to 150°C

† Stresses beyond those listed under "absolute maximum ratings" may cause permanent damage to the device. These are stress ratings only, and functional operation of the device at these or any other conditions beyond those indicated under "recommended operating conditions" is not implied. Exposure to absolute-maximum-rated conditions for extended periods may affect device reliability.

NOTES: 1. The input and output negative-voltage ratings may be exceeded if the input and output clamp-current ratings are observed.
2. This value is limited to 4.6 V maximum.
3. The package thermal impedance is calculated in accordance with JESD 51.

recommended operating conditions (see Note 4)

			MIN	MAX	UNIT
V_{CC}	Supply voltage		2.3	3.6	V
V_{IH}	High-level input voltage	V_{CC} = 2.3 V to 2.7 V	1.7		V
		V_{CC} = 2.7 V to 3.6 V	2		
V_{IL}	Low-level input voltage	V_{CC} = 2.3 V to 2.7 V		0.7	V
		V_{CC} = 2.7 V to 3.6 V		0.8	
V_I	Input voltage		0	V_{CC}	V
V_O	Output voltage		0	V_{CC}	V
I_{OH}	High-level output current	V_{CC} = 2.3 V		–12	mA
		V_{CC} = 2.7 V		–12	
		V_{CC} = 3 V		–24	
I_{OL}	Low-level output current	V_{CC} = 2.3 V		12	mA
		V_{CC} = 2.7 V		12	
		V_{CC} = 3 V		24	
$\Delta t/\Delta v$	Input transition rise or fall rate		0	10	ns/V
T_A	Operating free-air temperature		–40	85	°C

NOTE 4: Unused control inputs must be held high or low to prevent them from floating.

electrical characteristics over recommended operating free-air temperature range (unless otherwise noted)

PARAMETER	TEST CONDITIONS		V_{CC}	MIN	TYP†	MAX	UNIT
V_{OH}	I_{OH} = –100 µA		2.3 V to 3.6 V	V_{CC}–0.2			V
	I_{OH} = –6 mA,	V_{IH} = 1.7 V	2.3 V	2			
	I_{OH} = –12 mA	V_{IH} = 1.7 V	2.3 V	1.7			
		V_{IH} = 2 V	2.7 V	2.2			
			3 V	2.4			
	I_{OH} = –24 mA,	V_{IH} = 2 V	3 V	2			
V_{OL}	I_{OL} = 100 µA		2.3 V to 3.6 V			0.2	V
	I_{OL} = 6 mA,	V_{IL} = 0.7 V	2.3 V			0.4	
	I_{OL} = 12 mA	V_{IL} = 0.7 V	2.3 V			0.7	
		V_{IL} = 0.8 V	2.7 V			0.4	
	I_{OL} = 24 mA,	V_{IL} = 0.8 V	3 V			0.55	
I_I	V_I = V_{CC} or GND		3.6 V			±5	µA
$I_{I(hold)}$	V_I = 0.7 V		2.3 V	45			µA
	V_I = 1.7 V		2.3 V	–45			
	V_I = 0.8 V		3 V	75			
	V_I = 2 V		3 V	–75			
	V_I = 0 to 3.6 V‡		3.6 V			±500	
I_{OZ}	V_O = V_{CC} or GND		3.6 V			±10	µA
I_{CC}	V_I = V_{CC} or GND,	I_O = 0	3.6 V			40	µA
ΔI_{CC}	One input at V_{CC} – 0.6 V, Other inputs at V_{CC} or GND		3 V to 3.6 V			750	µA
C_i Control inputs	V_I = V_{CC} or GND		3.3 V		4.5		pF
C_i Data inputs					5		
C_o Outputs	V_O = V_{CC} or GND		3.3 V		7.5		pF

† All typical values are at V_{CC} = 3.3 V, T_A = 25°C.
‡ This is the bus-hold maximum dynamic current required to switch the input from one state to another.

timing requirements over recommended ranges of supply voltage and operating free-air temperature (unless otherwise noted)

		V_{CC} = 2.5 V ± 0.2 V		V_{CC} = 2.7 V		V_{CC} = 3.3 V ± 0.3 V		UNIT
		MIN	MAX	MIN	MAX	MIN	MAX	
f_{clock}	Clock frequency	0	150	0	150	0	150	MHz
t_w	Pulse duration, CLK high or low	3.3		3.3		3.3		ns
t_{su}	Setup time, A data before CLK↑	2		2		1.6		ns
t_h	Hold time, A data after CLK↑	0.7		0.5		1.1		ns

switching characteristics over recommended operating free-air temperature range, C_L = 50 pF (unless otherwise noted) (see Figures 1 and 2)

PARAMETER	FROM (INPUT)	TO (OUTPUT)	V_{CC} = 2.5 V ± 0.2 V		V_{CC} = 2.7 V		V_{CC} = 3.3 V ± 0.3 V		UNIT
			MIN	MAX	MIN	MAX	MIN	MAX	
f_{max}			150		150		150		MHz
t_{pd}	A	Y	1.7	4.6		4.1	1.6	3.6	ns
	CLK		1.6	5.1		4.4	1.5	3.9	
	$\overline{SEL}$		1.8	5.8		5.2	1.7	4.4	
t_{en}	$\overline{OE}$	Y	1.2	5.6		5	1.2	4.3	ns
t_{dis}	$\overline{OE}$	Y	2.1	5.7		4.7	1.6	4.5	ns

operating characteristics, T_A = 25°C

PARAMETER			TEST CONDITIONS	V_{CC} = 2.5 V ± 0.2 V	V_{CC} = 3.3 V ± 0.3 V	UNIT
				TYP	TYP	
C_{pd}	Power dissipation capacitance	Outputs enabled	C_L = 0 pF, f = 10 MHz	119	132	pF
		Outputs disabled		22	25	

PARAMETER MEASUREMENT INFORMATION
V_{CC} = 2.5 V ± 0.2 V

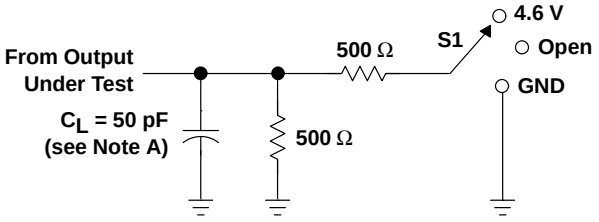

LOAD CIRCUIT

TEST	S1
t_{pd}	Open
t_{PLZ}/t_{PZL}	4.6 V
t_{PHZ}/t_{PZH}	GND

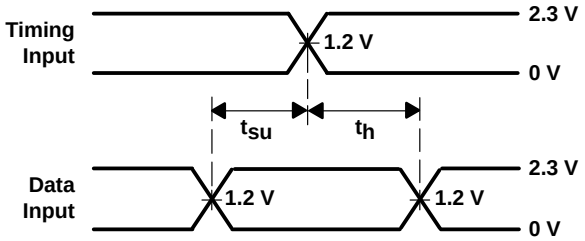

VOLTAGE WAVEFORMS
SETUP AND HOLD TIMES

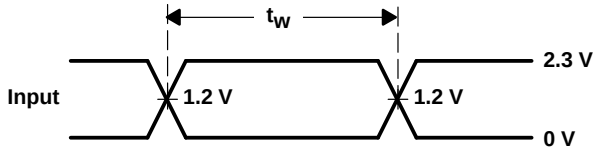

VOLTAGE WAVEFORMS
PULSE DURATION

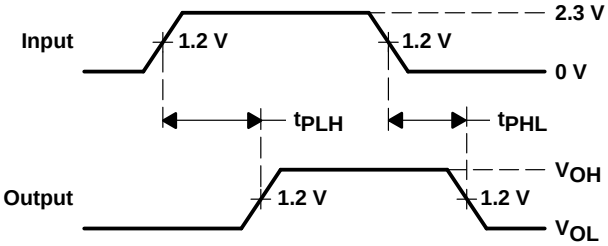

VOLTAGE WAVEFORMS
PROPAGATION DELAY TIMES

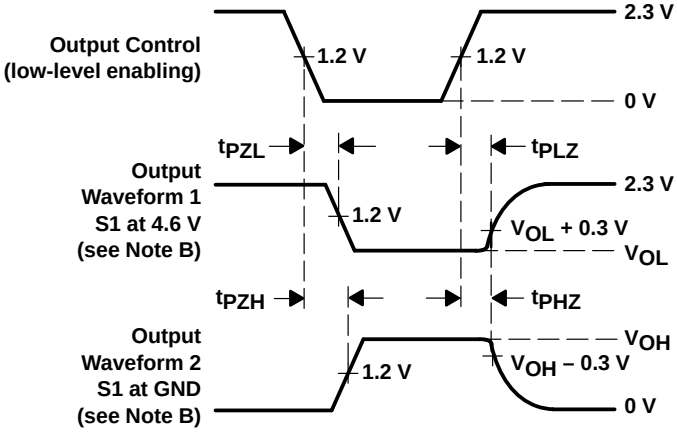

VOLTAGE WAVEFORMS
ENABLE AND DISABLE TIMES

NOTES:
A. C_L includes probe and jig capacitance.
B. Waveform 1 is for an output with internal conditions such that the output is low except when disabled by the output control. Waveform 2 is for an output with internal conditions such that the output is high except when disabled by the output control.
C. All input pulses are supplied by generators having the following characteristics: PRR ≤ 10 MHz, Z_O = 50 Ω, t_r ≤ 2.5 ns, t_f ≤ 2.5 ns.
D. The outputs are measured one at a time with one transition per measurement.
E. t_{PLZ} and t_{PHZ} are the same as t_{dis}.
F. t_{PZL} and t_{PZH} are the same as t_{en}.
G. t_{PHL} and t_{PLH} are the same as t_{pd}.

Figure 1. Load Circuit and Voltage Waveforms

PARAMETER MEASUREMENT INFORMATION
V_{CC} = 2.7 V AND 3.3 V ± 0.3 V

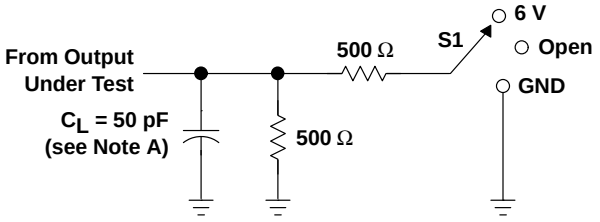

LOAD CIRCUIT

TEST	S1
t_{pd} t_{PLZ}/t_{PZL} t_{PHZ}/t_{PZH}	Open 6 V GND

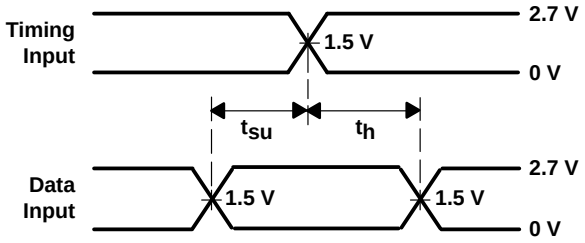

VOLTAGE WAVEFORMS
SETUP AND HOLD TIMES

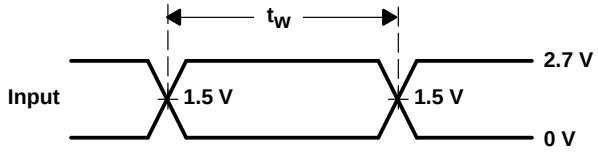

VOLTAGE WAVEFORMS
PULSE DURATION

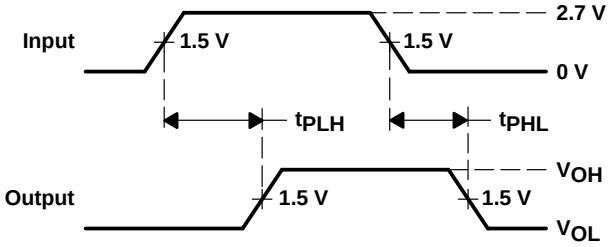

VOLTAGE WAVEFORMS
PROPAGATION DELAY TIMES

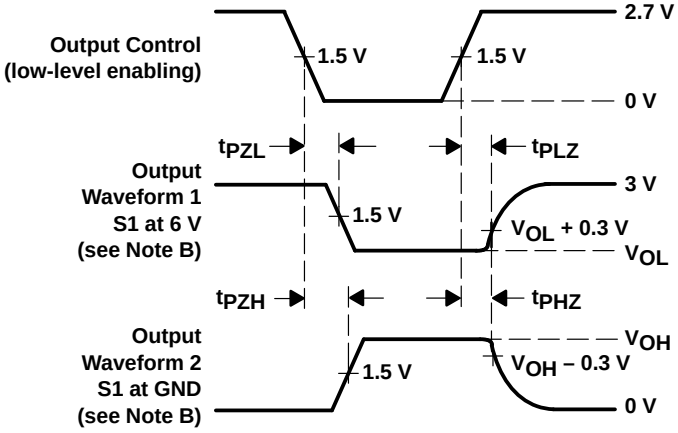

VOLTAGE WAVEFORMS
ENABLE AND DISABLE TIMES

NOTES: A. C_L includes probe and jig capacitance.
B. Waveform 1 is for an output with internal conditions such that the output is low except when disabled by the output control. Waveform 2 is for an output with internal conditions such that the output is high except when disabled by the output control.
C. All input pulses are supplied by generators having the following characteristics: PRR ≤ 10 MHz, Z_O = 50 Ω, t_r ≤ 2.5 ns, t_f ≤ 2.5 ns.
D. The outputs are measured one at a time with one transition per measurement.
E. t_{PLZ} and t_{PHZ} are the same as t_{dis}.
F. t_{PZL} and t_{PZH} are the same as t_{en}.
G. t_{PHL} and t_{PLH} are the same as t_{pd}.

Figure 2. Load Circuit and Voltage Waveforms

IMPORTANT NOTICE

Texas Instruments (TI) reserves the right to make changes to its products or to discontinue any semiconductor product or service without notice, and advises its customers to obtain the latest version of relevant information to verify, before placing orders, that the information being relied on is current.

TI warrants performance of its semiconductor products and related software to the specifications applicable at the time of sale in accordance with TI's standard warranty. Testing and other quality control techniques are utilized to the extent TI deems necessary to support this warranty. Specific testing of all parameters of each device is not necessarily performed, except those mandated by government requirements.

Certain applications using semiconductor products may involve potential risks of death, personal injury, or severe property or environmental damage ("Critical Applications").

TI SEMICONDUCTOR PRODUCTS ARE NOT DESIGNED, INTENDED, AUTHORIZED, OR WARRANTED TO BE SUITABLE FOR USE IN LIFE-SUPPORT APPLICATIONS, DEVICES OR SYSTEMS OR OTHER CRITICAL APPLICATIONS.

Inclusion of TI products in such applications is understood to be fully at the risk of the customer. Use of TI products in such applications requires the written approval of an appropriate TI officer. Questions concerning potential risk applications should be directed to TI through a local SC sales office.

In order to minimize risks associated with the customer's applications, adequate design and operating safeguards should be provided by the customer to minimize inherent or procedural hazards.

TI assumes no liability for applications assistance, customer product design, software performance, or infringement of patents or services described herein. Nor does TI warrant or represent that any license, either express or implied, is granted under any patent right, copyright, mask work right, or other intellectual property right of TI covering or relating to any combination, machine, or process in which such semiconductor products or services might be or are used.

Copyright © 1996, Texas Instruments Incorporated