C-MOS MICROPROCESSOR SUPERVISORY CIRCUITS

—TOP VIEW—

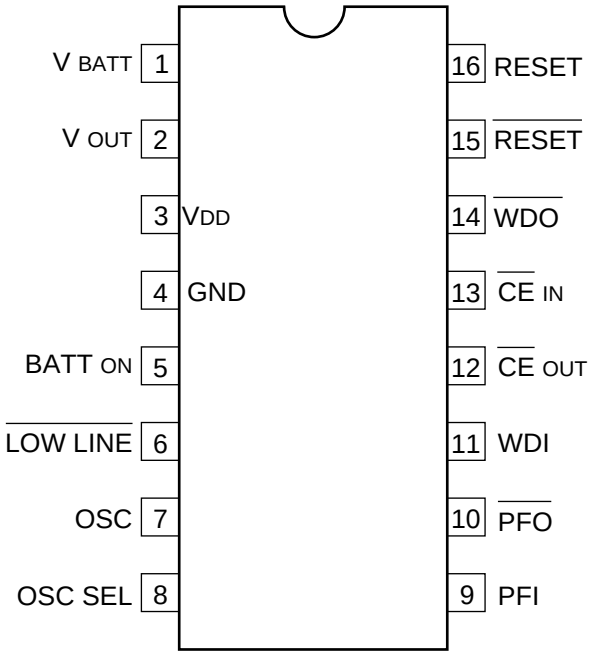

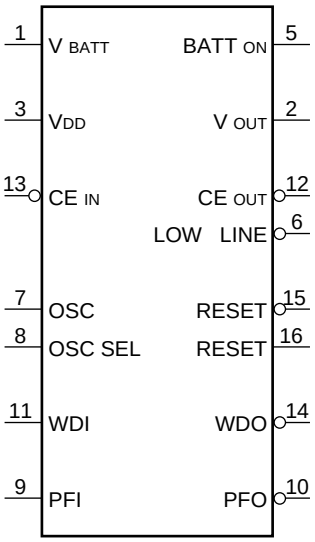
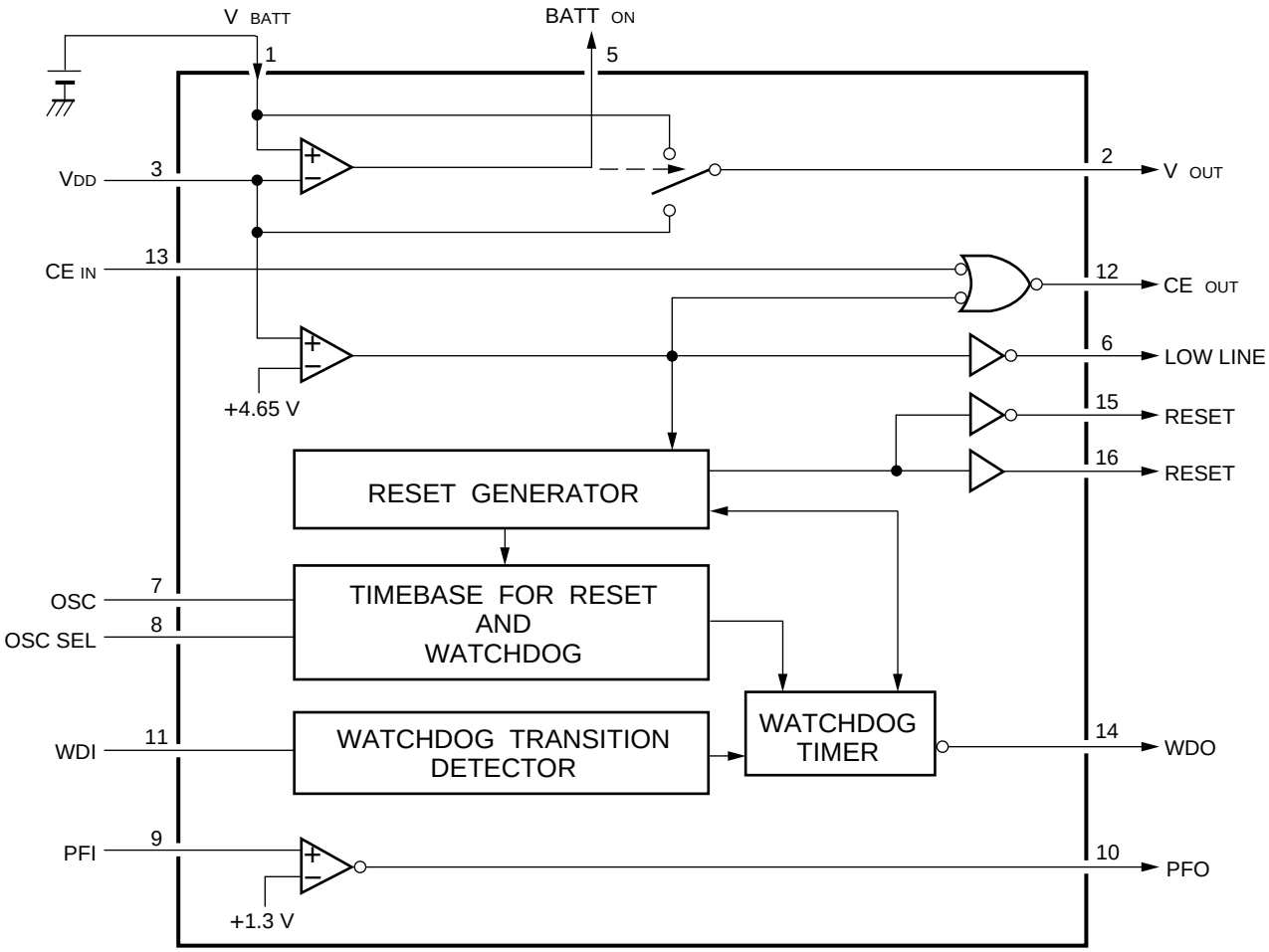
$\overline{CE}$; CHIP ENABLE
PFI, $\overline{PFO}$; POWER FAIL INPUT/OUTPUT
WDI, $\overline{WDO}$; WATCHDOG INPUT/OUTPUT