SOURCE TYPE DARLINGTON TRANSISTOR ARRAY
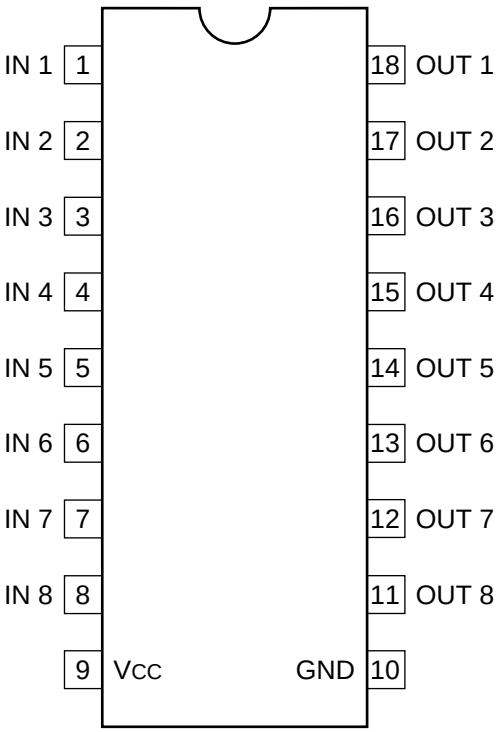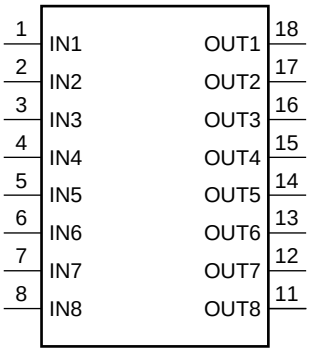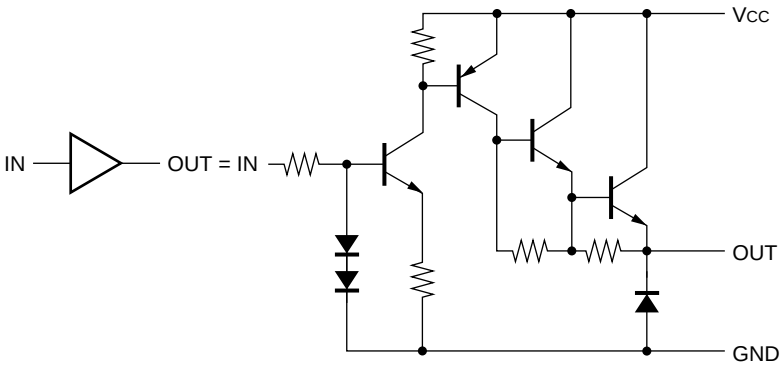
—TOP VIEW—