# (331,776 WORD × 8)-BIT FRAME MEMORY

—TOP VIEW—

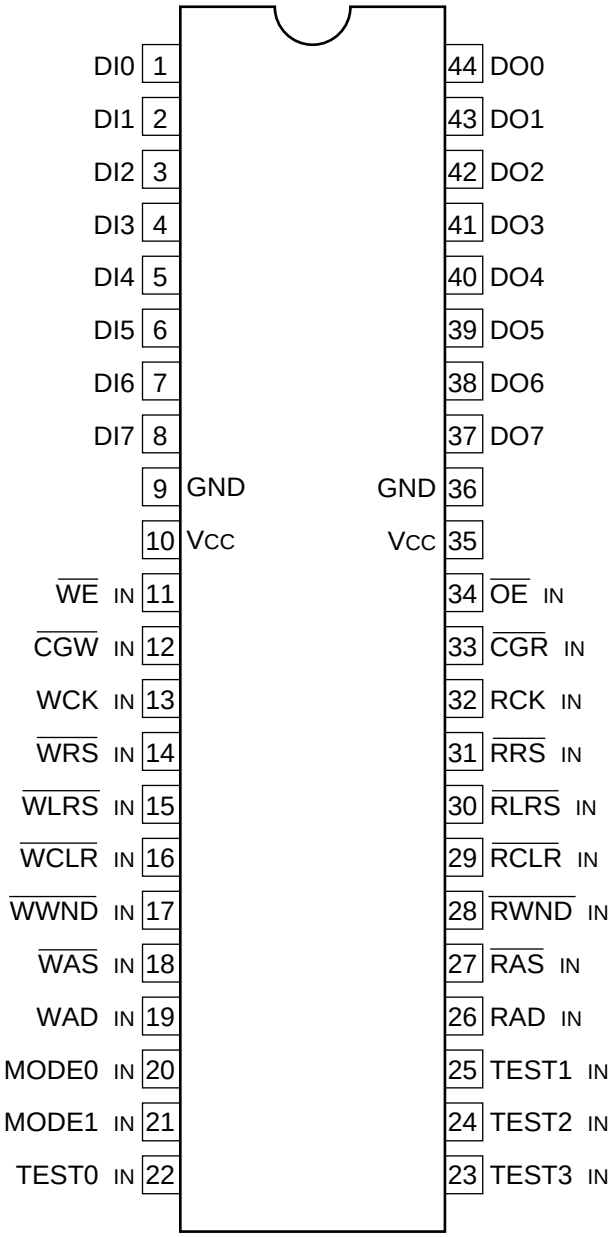


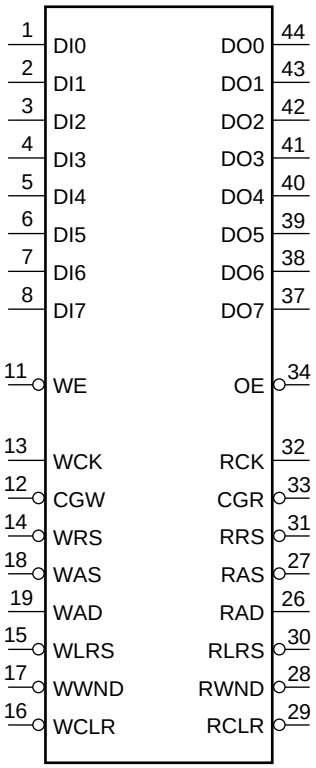


| | | |
|---|---|---|
| CGR | : | READ CLOCK GATE |
| CGW | : | WRITE CLOCK GATE |
| DI0 - DI7 | : | DATA INPUTS |
| DO0 - DO7 | : | DATA OUTPUTS |
| MODE0 - MODE1 | : | MODE SELECT INPUTS |
| $\overline{\text{OE}}$ | : | OUTPUT ENABLE INPUT |
| RAD | : | READ ADDRESS |
| $\overline{\text{RAS}}$ | : | READ ADDRESS SET |
| RCK | : | READ CLOCK INPUT |
| $\overline{\text{RCLR}}$ | : | READ CLEAR |
| $\overline{\text{RLRS}}$ | : | READ LINE RESET |
| $\overline{\text{RRS}}$ | : | READ RESET |
| $\overline{\text{RWND}}$ | : | READ WINDOW MODE |
| TEST0 - TEST3 | : | TEST INPUTS |
| WAD | : | WRITE ADDRESS |
| $\overline{\text{WAS}}$ | : | WRITE ADDRESS SET |
| WCK | : | WRITE CLOCK INPUT |
| $\overline{\text{WCLR}}$ | : | WRITE CLEAR |
| $\overline{\text{WE}}$ | : | WRITE ENABLE INPUT |
| $\overline{\text{WLRS}}$ | : | WRITE LINE RESET |
| $\overline{\text{WRS}}$ | : | WRITE RESET |
| $\overline{\text{WWND}}$ | : | WRITE WINDOW MODE |

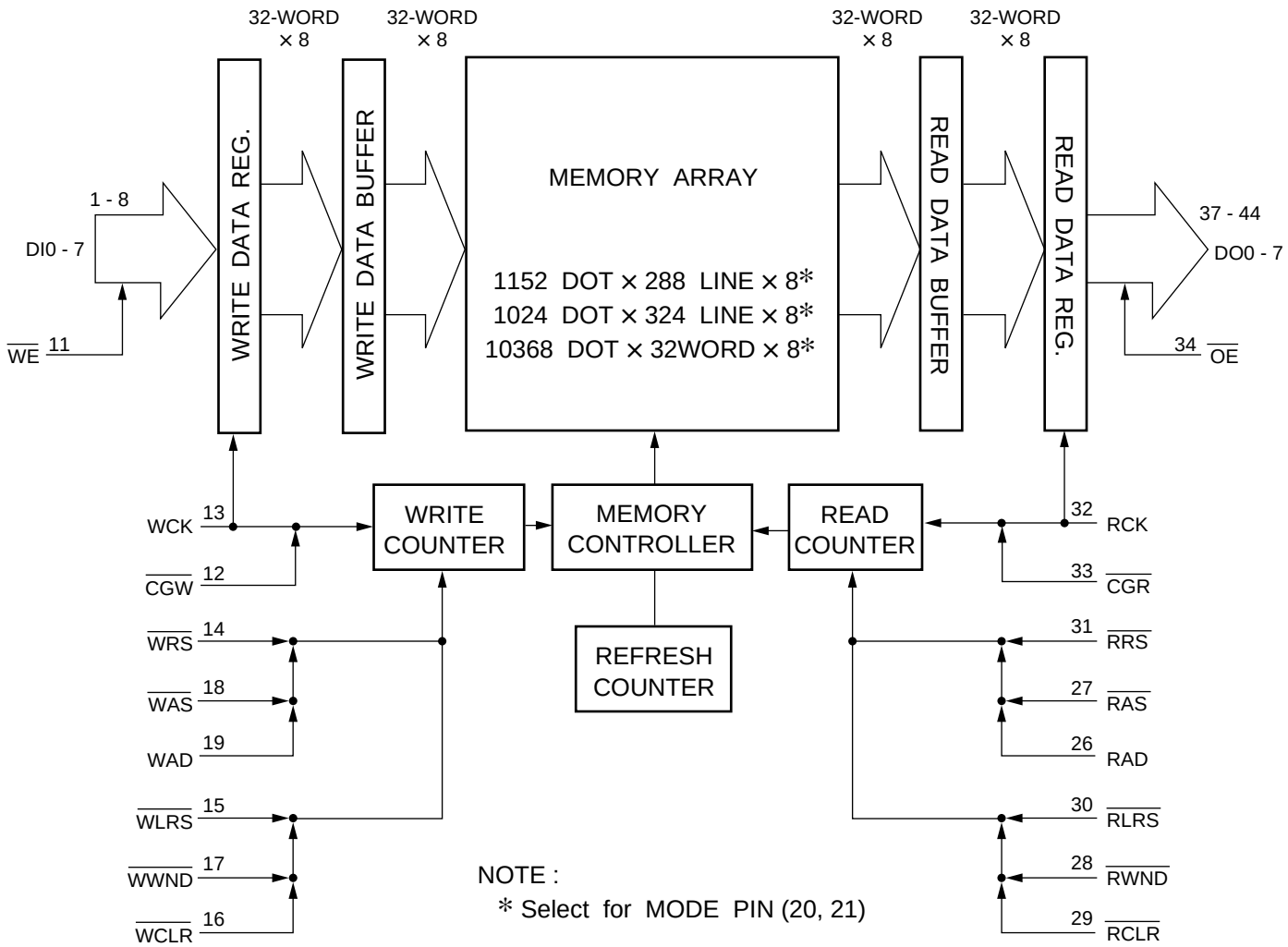
32-WORD × 8
32-WORD × 8
32-WORD × 8
32-WORD × 8
1 - 8
DI0 - 7
WE 11
WRITE DATA REG.
WRITE DATA BUFFER
MEMORY ARRAY
1152 DOT × 288 LINE × 8*
1024 DOT × 324 LINE × 8*
10368 DOT × 32WORD × 8*
READ DATA BUFFER
READ DATA REG.
37 - 44
DO0 - 7
34 OE
WCK 13
CGW 12
WRS 14
WAS 18
WAD 19
WLRS 15
WWND 17
WCLR 16
WRITE COUNTER
MEMORY CONTROLLER
READ COUNTER
REFRESH COUNTER
32 RCK
33 CGR
31 RRS
27 RAS
26 RAD
30 RLRS
28 RWND
29 RCLR
NOTE :
* Select for MODE PIN (20, 21)