C-MOS 8-BIT 20MSPS VIDEO A/D CONVERTER

—TOP VIEW—

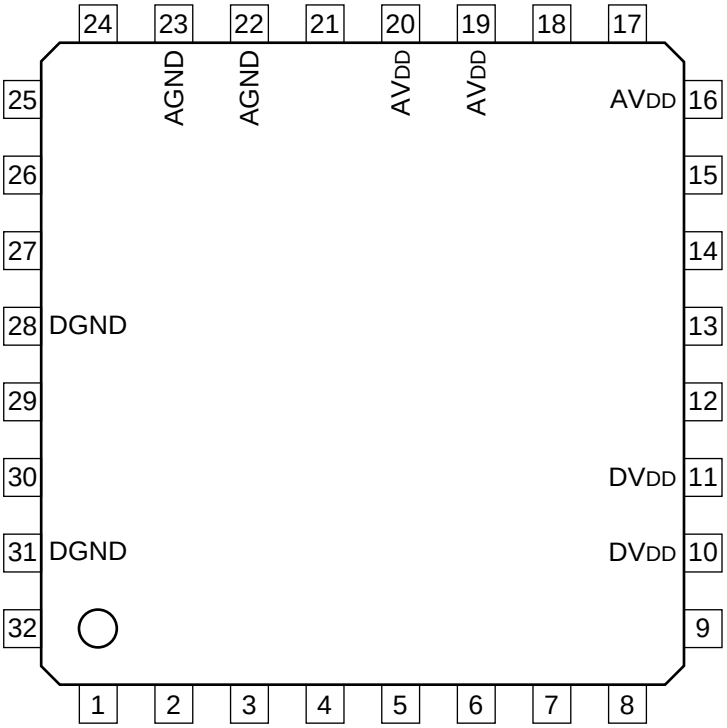

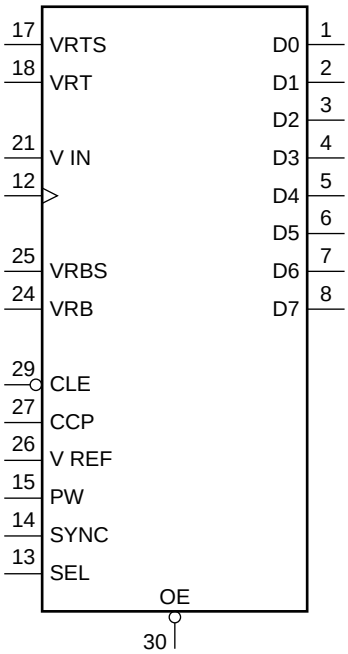

PIN NO.	I/O	SIGNAL	PIN NO.	I/O	SIGNAL
1	O	D0(LSB)	17	I	VRTS
2	O	D1	18	I	VRT
3	O	D2	19	—	AVDD
4	O	D3	20	—	AVDD
5	O	D4	21	I	V IN
6	O	D5	22	—	AGND
7	O	D6	23	—	AGND
8	O	D7(MSB)	24	I	VRB
9	—	NC	25	I	VRBS
10	—	DVDD	26	I	VREF
11	—	DVDD	27	I	CCP
12	I	CLK	28	—	DGND
13	I	SEL	29	I	$\overline{CLE}$
14	I	SYNC	30	I	$\overline{OE}$
15	I	PW	31	—	DGND
16	—	AVDD	32	—	NC

INPUT

CCP ; CLAMP CONTROL VOLTAGE FOR INTEGRATOR
$\overline{CLE}$; CLAMP ENABLE
CLK ; CLOCK
$\overline{CLP}$; CLAMP PULSE
$\overline{OE}$; OUTPUT ENABLE
PW ; PULSE WIDTH FOR MONO MULTI
SEL ; TRIGGER SELECT
SYNC ; TRIGGER PULSE FOR MONO MULTI VIBRATOR
V IN ; ANALOG
VRB ; REFERENCE VOLTAGE (BOTTOM)
VRBS ; SELF REFERENCE VOLTAGE SHORT (+0.5 V/BOTTOM)
VREF ; VOLTAGE REFERENCE FOR CLAMP
VRT ; REFERENCE VOLTAGE (TOP)
VRTS ; SELF REFERENCE VOLTAGE SHORT (+2.6 V/TOP)

OUTPUT

D0 - D7 ; DATA

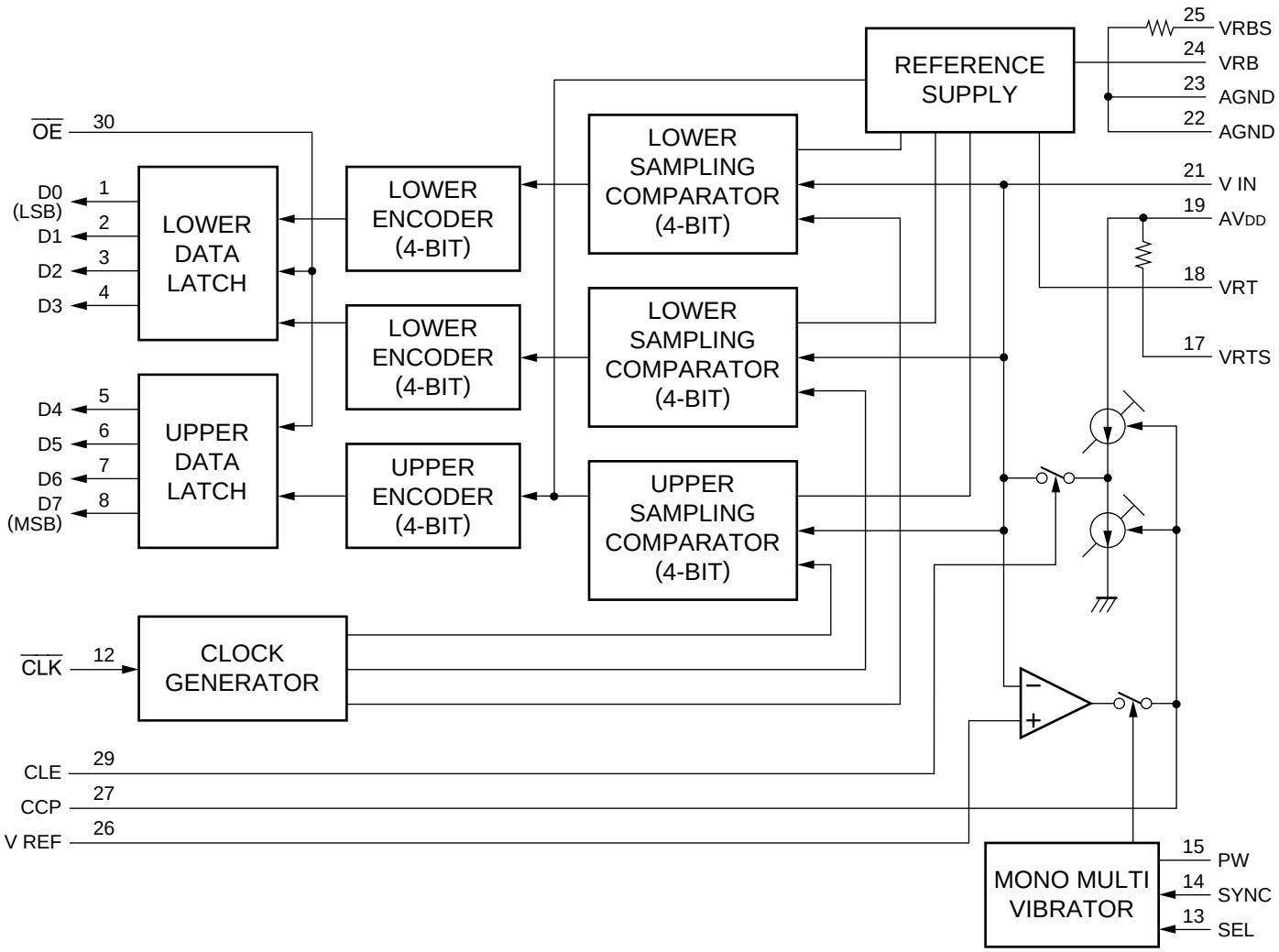
REFERENCE SUPPLY
25 VRBS
24 VRB
23 AGND
22 AGND
21 V IN
19 AVDD
18 VRT
17 VRTS
OE 30
D0 (LSB) 1
D1 2
D2 3
D3 4
LOWER DATA LATCH
D4 5
D5 6
D6 7
D7 (MSB) 8
UPPER DATA LATCH
LOWER ENCODER (4-BIT)
LOWER ENCODER (4-BIT)
UPPER ENCODER (4-BIT)
LOWER SAMPLING COMPARATOR (4-BIT)
LOWER SAMPLING COMPARATOR (4-BIT)
UPPER SAMPLING COMPARATOR (4-BIT)
CLK 12
CLOCK GENERATOR
CLE 29
CCP 27
V REF 26
MONO MULTI VIBRATOR
15 PW
14 SYNC
13 SEL