HIGH PRECISION SAMPLE AND HOLD AMPLIFIER
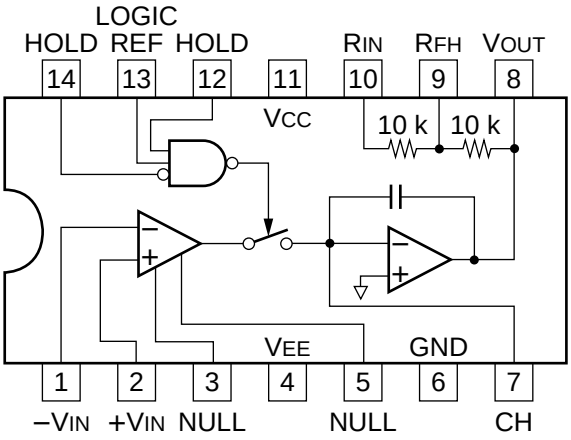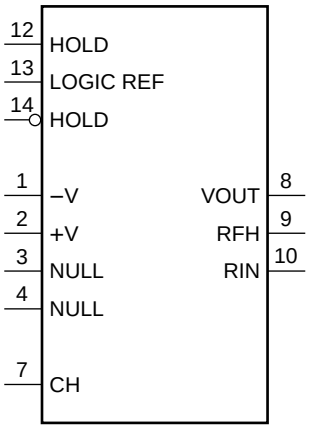
—TOP VIEW—